CITY OF CRESTVIEW

OFFICE OF THE CITY CLERK
P.O. DRAWER 1209, CRESTVIEW, FLORIDA 32536
Phone # (850) 682 - 1560 Fax # (850) 682-8077

May 10, 2021
6:00 PM
Council Chambers

REGULAR COUNCIL MEETING

The Public is invited to view our meetings on the City of Crestview Live stream a at https://www.cityofcrestview.org or the City of Crestview Facebook Page. You may submit questions on any agenda item in advance (by 3:00 PM the day of the meeting, please) to cityclerk@cityofcrestview.org.

1. Call to Order

2. Invocation, Pledge of Allegiance

3. Open Policy Making and Legislative Session

4. Approve Agenda

5. Presentations and Reports

6. Consent Agenda

6.1. Selection of Alternate Engineering Consultants

6.2. Approval of Elevated Tank Bid

7. Public Hearings / Ordinances on Second Reading

7.1. Ordinance 1823 - Joey's Law

8. Ordinances on First Reading

8.1. Ordinance 1824 - Jones Road Annexation

8.2. Ordinance 1825 - Jones Road Comprehensive Plan Amendment

8.3. Ordinance 1826 - Jones Road Rezoning

9. Resolutions

10. Action Items

10.1. Memorandum of Understanding with the Florida Department of Corrections

10.2. Main Street Demolition Bid

10.3. Emergency Purchase of PVC Irrigation pipe for Golf Course

11. City Clerk Report

12. City Manager Report

13. Comments from the Mayor and Council

14. Comments from the Audience

15. Adjournment

Note: The Presentations section is for items that were submitted by a citizen or group of Citizens no later than the Wednesday 2 weeks prior to the meeting to the Clerk's office for approval. These items will be scheduled under the section titles Presentations and Reports. Supporting documents must be submitted at this time to be on the regular agenda. All Action Item are for staff and elected officials only and must be submitted for approval no later than the Wednesday 10 days prior to the meeting. Those not listed on the regular agenda who wish to address the council should fill out a yellow card. The Card must be submitted to the City Clerk. Speaking time should be three minutes or less, large groups may designate a spokesperson. All remarks should be addressed to the Council as a whole and not to individual members. All meeting procedures are outlined in the Meeting Rules and Procedures brochure available outside the Chambers .If any person decides to appeal any decision made by the City Council with respect to any matter considered at such meeting or hearing, he or she will need a record of the proceedings, and that, for such purpose, he or she may need to ensure that a verbatim record of the proceedings is made, which record includes the testimony and evidence upon which the appeal is to be based. The City Council of the City of Crestview, Florida does not discriminate upon the basis of any individual's disability status. Anyone requiring reasonable accommodation a s provided for in the American With Disabilities Act to insure access to and participation in the meeting should contact the Office of the City Clerk at (850)682-1560 prior to the meeting to make appropriate arrangements.

Any invocation that is offered before the official start of the City Council meeting shall be the voluntary offering of a private person, to and for the benefit of the City Council. The views or beliefs expressed by the invocation speaker have not been previously reviewed or approved by the City Council or the city staff, and the City is not allowed by law to endorse the religious beliefs or views of this, or any other speaker. Persons in attendance at the City Council meeting are invited to stand during the opening invocation and Pledge of Allegiance. However, such invitation shall not be construed as a demand, order, or any other type of command. No person in attendance at the meeting shall be required to participate in any opening invocation that is offered. A person may exit the City Council Chambers and return upon completion of the opening invocation if a person does not wish to participate in or witness the opening invocation.

CITY OF CRESTVIEW

Item # 6.1.

Staff Report

CITY COUNCIL MEETING DATE: May 10, 2021
TYPE OF AGENDA ITEM: Action Item

TO:	Mayor and City Council
CC:	City Manager, City Clerk, Staff and Attorney
FROM:	Tim Bolduc, City Manager
DATE:	5/5/2021
SUBJECT:	Selection of Alternate Engineering Consultants

BACKGROUND:

The City of Crestview has engineering consultants on call for upcoming projects in the City.

The previous consulting agreements expired in February. Five engineering firms and two architectural firms were selected at the April 26, 2021 City Council meeting.

During the last City Council meeting the Council approved the award of continuing contracts to the top five (5) firms.

DISCUSSION:

The City published an advertisement for Continuing Contract Professional Engineering Services on February 22, 2021. The information was in the Northwest Florida Daily News, Vendor Registry, and on the cities website.

The Bids were opened on March 25, 2021 at approximately 2:00 PM.

There were 17 firms that submitted bids. with areas of expertise ranging from single disiplines to all areas of engineering and architecture.

At the most recent CIty Council meeting the City council selected the following seven (7) firms for continuing contracts.

Engineering Firms

Panhandle Engineering (PECS)
SEAS
Jacobs Engineering
Matrix Design Group

Ardurra Group

Architectural Firms

DAG Architects

Sam Marshall Architects

Upon further review by the City Manager and Public Works Director, the City Manager is requesting permission from the City Council to offer the remaining firms contracts as well. These firms will serve as alternates and may be used should the need arise either from workload or staff identifying projects that are better suited for a particular firm. As with the initial selections, there is no cost to the City unless the firm is issued a task order for a project.

The remaining firms are:

Alday-Howell Engineering, Inc.
Anderson Engineering
Barge Design Solutions
CDG Engineers & Associates
Geosyntec Consultants
Madrid CPWG
NOVA Engineering and Environmental
POLY, Inc.
Smith Seckman Reid
TJKM Transportation

GOALS & OBJECTIVES

This item is consistent with the goals in A New View Strategic Plan 2020 as follows;
Foundational- these are the areas of focus that make up the necessary foundation of a successful local government.

Financial Sustainability- Achieve long term financial sustainability

Organizational Capacity, Effectiveness & Efficiency- To efficiently & effectively provide the highest quality of public services

Infrastructure- Satisfy current and future infrastructure needs

Communication- To engage, inform and educate public and staff

Quality of Life- these areas focus on the overall experience when provided by the city.
Community Character- Promote desirable growth with a hometown atmosphere

Safety- Ensure the continuous safety of citizens and visitors

Mobility- Provide safe, efficient and accessible means for mobility

Opportunity- Promote an environment that encourages economic and educational opportunity

Play- Expand recreational and entertainment activities within the City

Community Culture- Develop a specific identity for Crestview

FINANCIAL IMPACT

There is no financial impact from the selection of firms.

RECOMMENDED ACTION

Staff respectfully requests City Council approve staff's recommendation to select the remaining companies as alternates.

Attachments

1. Firms
2. Ranking sheet

FIRM	Main Office	Satellite Office	Services	Subconsultants
Alday Howell Engineering	Marianna, FL	Crestview, FL	Traffic & Transportation, Stormwater, Planning	
Anderson Engineering	Springfield, MO	Destin, FL	Structural, Stormwater, Surveying	
Ardurra Group	Fort Walton Beach, FL		Water & Sewer, Stormwater, Environmental	Geotechnical
Barge Design Solutions	Nashville, TN	Miramar Beach, FL	Water & Sewer, Stormwater, Traffic, Environmental, Architectual, Structural, Surveying, Planning	
CDG Engineers	Andalusia, AL		Water & Sewer, Stormwater, Transportation, Environmental, Surveying, Geotechnical	
DAG Architects	Destin, FL		Architectual & Building Design	
Geosyntec Consultants	Boca Raton, FL	Pensacola, FL	Water & Sewer, Stormwater, Geotechnical	Traffic, Structural, Environmental, Surveying, Planning
Jacobs Engineering	Pensacola, FL		Water & Sewer, Stormwater, Traffic, Environmental, Architectual, Structural, Surveying, Planning, Geotech	
Madrid CPWG	Bartow, FL	Chipley, FL	Traffic, Water & Sewer, Stormwater, Geotechnical, Surveying	Structural, Architectual, Environmental, Planning
Matrix Design Group	Colorado Springs, CO	Niceville, FL	Planning & Urban Design, Traffic, Stormwater, Structural	Geotechnical, Environmental
NOVA	Pensacola, FL		Geotechnical, Environmental	
PECS	Marianna, FL		Traffic & Transportation, Stormwater, Planning	
Poly Inc.	Dothan, AL	Shalimar, FL	Water & Sewer, Stormwater, Environmental, Architechual	Traffic, Structural, Geotechnical, Surveying, Planning
Sam Marshall Architects	Pensacola, FL		Architectual & Building Design, Planning & Urban Design	
SEAS	Baker, FL		Surveying, Stormwater, General Civil	Geotechnical, Environmental, Structural, Architectual
Smith Seckman Reid	Nashville, TN	Crestview, FL	Structural, Traffic, Water & Sewer, Stormwater, Architechual	Surveying, Geotechnical, Environmental
TJKM Transportation	Pleasanton, CA	Tampa, FL	Traffic & Transportation, Planning	

Consulting Services RFP 21-03-25a

Reviewer: Date: 4/7/2021

Each category for review should receive a score between 1-5 based on the reviewer assesment of the provided proposal. The scores will be weighted based on the percentages. The company with the highest score will be the recommended vendor.

Company Name	Qualifications	Qualifications Weighted Score	Responsiveness	Responsiveness weighted Score	Experience	Experience Weighted	Recommendations	Recommendations Weighted	Local Preference* 1, 3, or 5	Local Preference weighted	Women/Minority Owned** 1 or 5	Women/Minority Owned weighted	Total Weighted score	Post Audit
Alday Howell Engineering	3.65	18.25	3.60	10.80	3.60	21.60	3.40	13.60	5.00	5.00	1.00	1.00	70.25	**14**
Anderson Engineering	4.15	20.75	3.60	10.80	3.55	21.30	3.20	12.80	3.00	3.00	1.00	1.00	69.65	**15**
Ardurra Group	4.20	21.00	3.80	11.40	4.25	25.50	4.15	16.60	3.00	3.00	1.00	1.00	78.50	**5**
Barge Design Solutions	3.95	19.75	3.35	10.05	4.20	25.20	3.60	14.40	1.00	1.00	5.00	5.00	75.40	**7**
CDG Engineers	4.10	20.50	3.40	10.20	3.95	23.70	3.55	14.20	0.00	0.00	1.00	1.00	69.60	**16**
DAG Architects	3.45	17.25	3.60	10.80	4.10	24.60	3.95	15.80	3.00	3.00	1.00	1.00	72.45	**12**
Geosyntec Consultants	4.20	21.00	3.60	10.80	4.00	24.00	3.70	14.80	1.00	1.00	1.00	1.00	72.60	**11**
Jacobs Engineering	4.40	22.00	4.20	12.60	4.50	27.00	4.05	16.20	1.00	1.00	1.00	1.00	79.80	**3**
Madrid CPWG	4.25	21.25	3.25	9.75	4.25	25.50	3.55	14.20	0.00	0.00	1.00	1.00	71.70	**13**
Matrix Design Group	4.15	20.75	4.00	12.00	4.45	26.70	3.80	15.20	3.00	3.00	1.00	1.00	78.65	**4**
NOVA	4.40	22.00	4.00	12.00	4.20	25.20	3.70	14.80	1.00	1.00	1.00	1.00	76.00	**6**
PECS	4.25	21.25	4.20	12.60	4.40	26.40	4.20	16.80	0.00	0.00	5.00	5.00	82.05	**1**
Poly Inc.	4.00	20.00	4.00	12.00	4.15	24.90	3.35	13.40	3.00	3.00	1.00	1.00	74.30	**10**
Sam Marshall Architects	3.95	19.75	3.80	11.40	4.35	26.10	3.95	15.80	1.00	1.00	1.00	1.00	75.05	**8**
SEAS	4.20	21.00	4.20	12.60	4.40	26.40	4.50	18.00	3.00	3.00	1.00	1.00	82.00	**2**
Smith Seckman Reid	4.15	20.75	3.60	10.80	3.80	22.80	3.55	14.20	5.00	5.00	1.00	1.00	74.55	**9**
TJKM Transportation	3.90	19.50	3.20	9.60	3.70	22.20	2.85	11.40	0.00	0.00	1.00	1.00	63.70	**17**

* Local Preference (1) Santa Rosa, Walton or Escambia County (3) Okaloosa County (5) City of Crestview ** Women/Minority Owned (1) no (5) yes

CITY OF CRESTVIEW Item # 6.2.

Staff Report

CITY COUNCIL MEETING DATE: May 10, 2021
TYPE OF AGENDA ITEM: Action Item

TO:	Mayor and City Council
CC:	City Manager, City Clerk, Staff and Attorney
FROM:	Wayne Steele, Public Services Director
DATE:	5/5/2021
SUBJECT:	Approval of Elevated Tank Bid

BACKGROUND:

A Elevated Water Storage Tank is planned to be located on City owned parcel 35-3N-24-0000-0007-0010 on Point Center Road behind Antioch Elementary School. The tank will increase the storage capacity of the City's water system. The water tower was planned and budgeted for the 2020-2021 budget cycle.
Alterative #1 is for the painting of the mural.
The original design calls for a composite tank. A spheroid tank was included as an alternative design and is included as alternative #2.

DISCUSSION:

Three bidders showed interest in the project during the Pre-bid meeting. However, only Chicago Bridge and Iron Storage Tank Solutions, LLC (CB&I) and Caldwall Tanks submitted bids.

CB&I had the lower base bid at $2,646,000 versus Caldwell's $2,894,000. CB&I also had the lower bid, at $2,150,243, when the alternative items were added compared to Caldwell's, at $2,675,000 million.

The provided references were contacted and CB&I is the apparent low, responsive, responsible bidder. Part of CB&I's bid included an additional alterative that added 90 days to the contract time which allowed the tank painting to be done in the summer, which reduced overall cost.

GOALS & OBJECTIVES

This item is consistent with the goals in A New View Strategic Plan 2020 as follows;
Foundational- these are the areas of focus that make up the necessary foundation of a successful local government.
Infrastructure- Satisfy current and future infrastructure needs

FINANCIAL IMPACT

A budget of $1,300,000 was provided for this tank in this year's budget. The increase in price is due to the age of the cost estimate (a hold over from the 2018-2019 budget), the increase in material prices, and the increase in the lead time of parts (COVID related).
This project will need an additional $850,243.00 if all alternatives are approved or an additional $1,346,000.00 if the project is contracted as designed.

RECOMMENDED ACTION

Staff respectfully requests approval of the needed budget increase and approval of Chicago Bridge and Iron

Storage Tank Solutions, LLC as the project's contractor with all alternative items included.

Attachments

1. Antioch_Elevated_Storage_Tank_Plans11x17
2. Bid Tab
3. Crestview FL Spheroid Mural 2

ANTIOCH ROAD ELEVATED WATER STORAGE TANK
BID DOCUMENTS
THE CITY OF CRESTVIEW PUBLIC SERVICES
JACOBS PROJECT NO. D3282100

LOCATION MAP
SCALE: 1" = 1000'

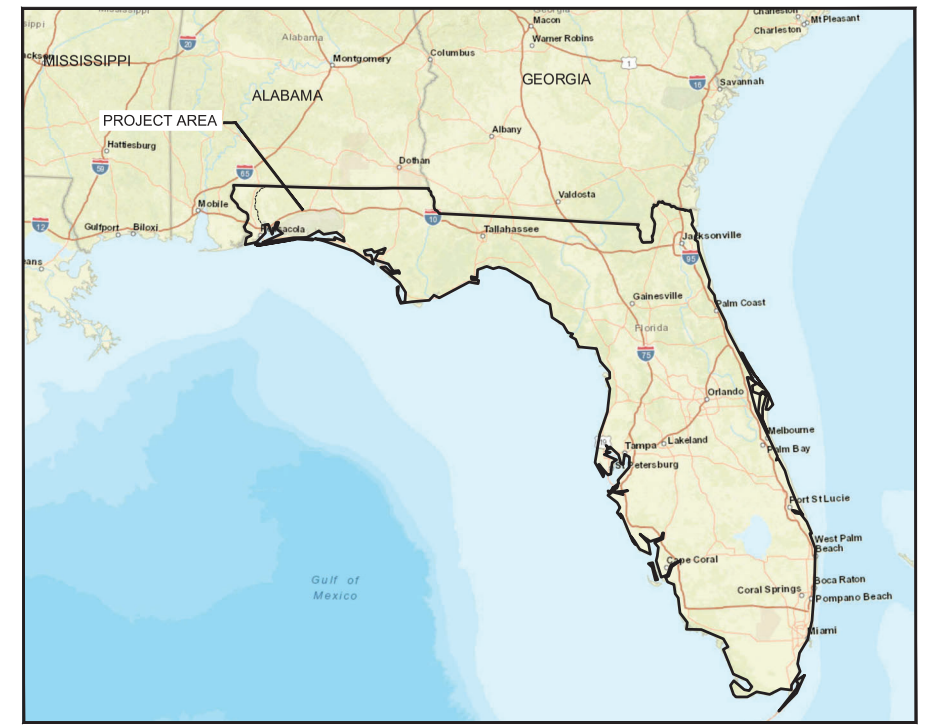

VICINITY MAP
SCALE: 1" = 400000'

SITE INFORMATION

OWNER INFORMATION:	THE CITY OF CRESTVIEW
	ANTIOCH ELEVATED WATER TANK
	715 N FERDON BLVD
	CRESTVIEW, FL 32536
	PHONE: (850)-682-6132 ATTN: WAYNE STEELE
ENGINEER:	JACOBS
ENGINEER INFORMATION:	25 W CEDAR STREET, SUITE 350 PENSACOLA, FL 32502 PHONE: (850) 941-7282

DRAWING INDEX

SHEET NUMBER	DRAWING NUMBER	DRAWING NAME
01	G-01	COVER SHEET, LOCATION MAPS AND DRAWING INDEX
02	G-02	GENERAL NOTES AND LEGEND
03	G-03	STRUCTURAL NOTES AND LEGEND
04	G-04	STRUCTURAL NOTES AND LEGEND
05	G-05	CIVIL DETAILS
06	G-06	CIVIL DETAILS
07	G-07	CIVIL DETAILS
08	G-08	ELECTRICAL LEGEND SHEET 1
09	G-09	ELECTRICAL LEGEND SHEET 2
10	C-01	EXISTING CONDITIONS
11	C-02	GRADING, DRAINAGE, AND EROSION CONTROL PLAN
12	C-03	PROPOSED SITE IMPROVEMENTS
13	C-04	GEOMETRIC CONTROL PLAN
14	S-01	STRUCTURAL PLANS
15	S-02	STRUCTURAL ELEVATION AND SECTION
16	S-03	STRUCTURAL DETAILS
17	S-04	STRUCTURAL DETAILS
18	S-05	STRUCTURAL DETAILS
19	E-01	SITE PLAN AND ONE LINE DIAGRAM
20	E-02	PANEL SCHEDULE AND WATER TOWER ELEVATION
21	E-03	STANDARD DETAILS

NO.	DATE	DR	REVISION	CHK	APVD	BY	APVD
DSGN	S. TATMAN	S. TATMAN		J. NESSL		S. JERNIGAN	

ANITOCH ROAD COMPOSITE WATER TOWER
PUBLIC SERVICES
CITY OF CRESTVIEW
CRESTVIEW, FLORIDA

JACOBS

ANTIOCH WATER TOWER
DESIGN PLANS

REUSE OF DOCUMENTS: THIS DOCUMENT, AND THE IDEAS AND DESIGNS INCORPORATED HEREIN, AS AN INSTRUMENT OF PROFESSIONAL SERVICE, IS THE PROPERTY OF CH2M HILL AND IS NOT TO BE USED, IN WHOLE OR IN PART, FOR ANY OTHER PROJECT WITHOUT THE WRITTEN AUTHORIZATION OF CH2M HILL.
©CH2M HILL 2018. ALL RIGHTS RESERVED.

VERIFY SCALE
BAR IS ONE INCH ON ORIGINAL DRAWING.
0 1"

DATE	MARCH 2021
PROJ	D3282100
DWG	G-01
SHEET	1 of 21

BID DOCUMENTS

GENERAL SITE NOTES:

1. ALL WORK SHALL BE IN ACCORDANCE WITH THE CITY OF CRESTVIEW STANDARD DETAILS AND SPECIFICATIONS.
2. CONTRACTOR TO OBTAIN OKALOOSA COUNTY AND FLORIDA DOT UTILITY PERMITS AND MAINTENANCE OF TRAFFIC PLAN FOR WORK IN THE RIGHT-OF-WAYS.
3. STAGING AREA SHALL BE FOR CONTRACTOR'S EMPLOYEE PARKING, CONTRACTOR'S TRAILERS AND ON-SITE STORAGE OF MATERIALS.
4. CONTRACTOR SHALL NOT DISTURB AREAS OUTSIDE EXISTING RIGHTS-OF-WAY OR TEMPORARY CONSTRUCTION EASEMENTS.
5. CONTRACTOR TO ADJUST ALL EXISTING UTILITY CASTINGS INCLUDING VALVE BOXES, MANHOLES, HAND HOLES, PULL BOXES, INLETS AND SIMILAR STRUCTURES WITHIN PAVED AREAS TO MATCH FLUSH WITH FINISHED GRADE.
6. THE CONTRACTOR SHALL REPAIR AND RESTORE EXISTING PAVEMENT, SIDEWALKS, CURBS, DRIVEWAYS, PIPES, IRRIGATION LINES, CONDUIT, CABLES, ETC. AS A RESULT OF THE CONSTRUCTION ACTIVITIES.
7. NO DEBRIS OR CONSTRUCTION MATERIALS WILL BE BURIED OR DISPOSED OF ONSITE. ALL SUCH MATERIAL SHALL BE DISPOSED OF IN ACCORDANCE WITH LOCAL AND STATE REGULATIONS.
8. SEE SEPARATE VOLUME FOR PROJECT SPECIFICATIONS.
9. SOURCE OF TOPOGRAPHY SHOWN ON THE CIVIL PLANS ARE BASE MAPS PROVIDED BY SEAS SURVEYING 2019. EXISTING CONDITIONS MAY VARY FROM THOSE SHOWN ON THESE PLANS. THE CONTRACTOR SHALL VERIFY EXISTING CONDITIONS AND ADJUST WORK PLAN ACCORDINGLY PRIOR TO BEGINNING CONSTRUCTION. NOTIFY ENGINEER AND OWNER OF DISCREPANCIES AND CONFLICTS.
10. EXISTING TOPOGRAPHY, STRUCTURES, AND SITE FEATURES ARE SHOWN SCREENED AND/OR LIGHT-LINED. NEW FINISH GRADE, STRUCTURES, AND SITE FEATURES ARE SHOWN HEAVY-LINED.
11. MAINTAIN, RELOCATE, OR REPLACE EXISTING SURVEY MONUMENTS, CONTROL POINTS, AND STAKES WHICH ARE DISTURBED OR DESTROYED. PERFORM THE WORK TO PRODUCE THE SAME LEVEL OF ACCURACY AS THE ORIGINAL MONUMENT(S) IN A TIMELY MANNER, AND AT THE CONTRACTOR'S EXPENSE.
12. COORDINATES AND DIMENSIONS SHOWN FOR ROADWAY IMPROVEMENTS ARE TO FACE OF CURB OR EDGE OF PAVEMENT.
13. PROVIDE TEMPORARY FENCING AS NECESSARY TO MAINTAIN SECURITY AT ALL TIMES.
14. ELEVATIONS GIVEN ARE TO FINISH GRADE UNLESS OTHERWISE SHOWN.
15. SLOPE UNIFORMLY BETWEEN CONTOURS AND SPOT ELEVATIONS SHOWN.
16. CONTRACTOR SHALL BE RESPONSIBLE FOR IMPLEMENTING AND MAINTAINING EROSION CONTROL DEVICES DURING CONSTRUCTION. EROSION CONTROL DEVICE (SHOWN ON C-02) IS THE MINIMUM REQUIRED.
17. CONTRACTOR SHALL TAKE ALL OTHER MEASURES TO POSITIVELY PRECLUDE EROSION MATERIALS FROM LEAVING THE SITE. CONTRACTOR TO SUBMIT EROSION CONTROL PLAN.

CIVIL LEGEND

EXISTING	PROPOSED	
158.5	158.5	SPOT ELEVATION
155	155	CONTOUR LINE
		CHAIN LINK FENCE
		CONCRETE PAVEMENT
		ASPHALT CONCRETE PAVEMENT
		PROPERTY LINE
EL	EL	EASEMENT LINE
		ACCESS ROAD SURFACING
		BENCH MARK
	N 1000.00 E 1000.00	STRUCTURE, BUILDING OR FACILITY LOCATION POINT - COORDINATES
		CLEARING AND GRUBBING
		RIP RAP

GENERAL YARD PIPING AND UTILITY NOTES

1. EXISTING UNDERGROUND UTILITIES OBTAINED FROM AS-BUILTS AND FROM FIELD SURVEY. CONTRACTOR SHALL FIELD VERIFY DEPTH AND LOCATION PRIOR TO EXCAVATION. PROTECT ALL EXISTING UTILITIES DURING CONSTRUCTION.
2. UNLESS OTHERWISE SHOWN ALL PIPING SHALL HAVE A MINIMUM OF 3'-0" COVER.
3. ALL PIPES SHALL HAVE A CONSTANT SLOPE BETWEEN INVERT ELEVATIONS UNLESS A FITTING IS SHOWN.
4. ALL INTERNAL TANK COATINGS SHALL MEET NSF 61 STANDARDS.
5. ALL PIPE, APPURTENANCES, AND ASSOCIATED COATINGS SHALL MEET NSF 61 STANDARDS.
6. FOR TRENCHING AND BACKFILL, SEE (3123-110).
7. FOR SURFACE RESTORATION OF ASPHALT CONCRETE, SEE (3123-115).

GENERAL INFORMATION

1. FOR ABBREVIATIONS NOT LISTED, SEE ASME Y14.38 "ABBREVIATIONS AND ACRONYMS: PUBLICATION AS DISTRIBUTED BY THE AMERICAN SOCIETY OF MECHANICAL ENGINEERS (ASME).
2. DESIGN DETAILS ARE INTENDED TO BE TYPICAL AND SHALL APPLY TO SIMILAR SITUATIONS OCCURRING THROUGHOUT THE PROJECT, WHETHER OR NOT THEY ARE INDIVIDUALLY CALLED OUT.
3. VERIFY FINAL OPENING DIMENSIONS IN WALLS, SLABS, AND DECKS WITH OTHER DISCIPLINE DRAWINGS PRIOR TO CONSTRUCTION OF THESE ELEMENTS.
4. DO NOT CUT OR MODIFY STRUCTURAL MEMBERS FOR PIPES, DUCTS, ETC, UNLESS SPECIFICALLY DETAILED OR APPROVED IN WRITING BY THE ENGINEER.
5. INFORMATION (DETAILING, DIMENSIONS, CONFIGURATIONS, AND ELEVATIONS, ETC.) OF EXISTING CONSTRUCTION SHOWN REFLECTS AVAILABLE EXISTING DESIGN DOCUMENTS, AND DOES NOT NECESSARILY REPRESENT THE AS-CONSTRUCTED CONDITIONS. THE CONTRACTOR SHALL FIELD VERIFY DIMENSIONS, ELEVATIONS AND DETAILING OF THE EXISTING STRUCTURES PRIOR TO UNDERTAKING ANY WORK THAT IS AFFECTED BY THE EXISTING STRUCTURE.

NO.	DATE	REVISION	BY	APVD

DSGN S. TATMAN | DR S. TATMAN | CHK J. NESSL | APVD S. JERNIGAN

ANITOCH ROAD COMPOSITE WATER TOWER
PUBLIC SERVICES
CITY OF CRESTVIEW
CRESTVIEW, FLORIDA

JACOBS

CIVIL
ANTIOCH WATER TOWER
GENERAL NOTES AND LEGEND

VERIFY SCALE
BAR IS ONE INCH ON ORIGINAL DRAWING.
0 1"

DATE	MARCH 2021
PROJ	D3282100
DWG	G-02
SHEET	2 of 21

BID DOCUMENTS

REUSE OF DOCUMENTS: THIS DOCUMENT, AND THE IDEAS AND DESIGNS INCORPORATED HEREIN, AS AN INSTRUMENT OF PROFESSIONAL SERVICE, IS THE PROPERTY OF CH2M HILL AND IS NOT TO BE USED, IN WHOLE OR IN PART, FOR ANY OTHER PROJECT WITHOUT THE WRITTEN AUTHORIZATION OF CH2M HILL.
©CH2M HILL 2018. ALL RIGHTS RESERVED.

DESIGN CRITERIA

1. APPLICABLE CODE: FLORIDA BUILDING CODE SIXTH EDITION (2017)
2. REFER TO THE DRAWINGS FOR ADDITIONAL AND SPECIFIC STRUCTURE LOADINGS AND REQUIREMENTS.
3. ALL LOADS SHOWN ARE SERVICE LEVEL (UNFACTORED) UNLESS SPECIFICALLY NOTED OTHERWISE.
4. DEAD LOADS:
   A. SELF WEIGHT
5. ROOF LOADS:
   GROUND SNOW LOAD, Pg = 0 PSF
   LIVE LOAD = 20 PSF

   STRUCTURES SHALL BE DESIGNED FOR REDUCED ROOF LIVE LOADS IN ACCORDANCE WITH THE FBC.
6. FLOOR LIVE LOADS:
   STAIRS: =100 PSF
   WALKWAYS AND ELEVATED PLATFORMS =100 PSF
   LIGHT STORAGE =125 PSF

   COLUMNS, FOOTINGS, AND FLOOR FRAMING MEMBERS HAVE BEEN DESIGNED FOR REDUCED LIVE LOADS IN ACCORDANCE WITH THE BUILDING CODE.

   DEFLECTION CRITERIA FOR CONTRACTOR DESIGNED FLOOR FRAMING MEMBERS:

   INDUSTRIAL/PROCESS FLOOR (ELECTRICAL/ MECHANICAL ROOMS, STORAGE, ETC):
   TOTAL LOAD =L/240
   LIVE LOAD =L/360

   OCCUPIED SPACE FLOOR (CORRIDORS, EXITS, ETC):
   TOTAL LOAD =L/360
   LIVE LOAD =L/480

   WHERE L IS THE MEMBER SPAN LENGTH
7. WIND LOADS:
   ASCE 7 METHOD= ALL HEIGHTS
   MWFRS DIRECTIONAL PROCEDURE
   BASIC WIND SPEED, Vul t= 150 MPH
   NOMINAL WIND SPEED, Vasd = 117 MPH
   EXPOSURE CATEGORY= C
   RISK CATEGORY=IV
8. SEISMIC LOADS:

   MAPPED SPECTRAL RESPONSE ACCELERATIONS
   Ss= 0.091g
   S1= 0.055g
   DESIGN SPECTRAL RESPONSE ACCELERATIONS
   SDS= 0.097g
   SD1= 0.088g
   SITE CLASS= D
   SEISMIC DESIGN CATEGORY= C
   IMPORTANCE FACTOR, Ie= 1.5

   STRUCTURES SHALL BE ANALYZED FOR SEISMIC PROCEDURES IN ACCORDANCE WITH ASCE 7.
9. SPECIAL LOADS:SEE PLANS FOR STRUCTURE SPECIFIC LOADS
10. HYDRAULIC LOADS:SEE PLANS FOR STRUCTURE SPECIFIC LOADS
11. SOIL DESIGN PARAMETERS:
    A. WATER TOWER SHALL BE SUPPORTED ON DEEP FOUNDATIONS. REFER TO RECOMMENDATION IN GEOTECHNICAL REPORT. SEE FOUNDATION SECTION.
    B. GROUND WATER (GW) ELEVATION:
       NORMAL HIGH GW EL +/-40 FT BELOW GRADE
       100 YEAR FLOOD EL xxx
    C. FACTOR OF SAFETY FOR UPLIFT RESISTANCE (SOIL FRICTION AND WEDGE FAILURE NOT CONSIDERED):
       NORMAL HIGH GW ELEVATION FOS = 1.25
       100 YEAR FLOOD ELEVATION FOS = 1.10
12. FROST DEPTH NEED FROM GEOTECH
13. ICE LOADS:
    A. NOMINAL ICE THICKNESS 0.25 IN
    B. CONCURRENT WIND SPEED (3-SECOND GUST): 30 MPH
    C. ICE IMPORTANCE FACTOR THICKNESS: 1.25
    D. ICE IMPORTANCE FACTOR WIND: 1.00

GENERAL INFORMATION

1. FOR ABBREVIATIONS NOT LISTED SEE ASME Y14.38 "ABBREVIATIONS AND ACRONYMS: PUBLICATION AS DISTRIBUTED BY THE AMERICAN SOCIETY OR MECHANICAL ENGINEERS.
2. DESIGN DETAILS ARE INTENDED TO BE TYPICAL AND SHALL APPLY TO SIMILAR SITUATIONS OCCURRING THROUGHOUT THE PROJECT, WHETHER OR NOT THEY ARE INDIVIDUALLY CALLED OUT.
3. FOR NUMBER, TYPE, SIZE, ARRANGEMENT, AND/OR LOCATION OF EQUIPMENT PADS, SEE OTHER DISCIPLINE DRAWINGS. COORDINATE WITH EQUIPMENT SUPPLIER PRIOR TO PLACING SLABS, WALLS AND FOUNDATIONS.COORDINATE PIPING OPENINGS WITH OTHER DISCIPLINE DRAWINGS.
4. DO NOT CUT OR MODIFY STRUCTURAL MEMBERS FOR PIPES, DUCTS, ETC, UNLESS SPECIFICALLY DETAILED OR APPROVED IN WRITING BY THE ENGINEER.
5. VISITS TO THE JOB SITE BY THE ENGINEER TO OBSERVE THE CONSTRUCTION DO NOT IN ANY WAY MEAN THAT ENGINEER IS GUARANTOR OF CONSTRUCTOR'S WORK, NOR RESPONSIBLE FOR THE COMPREHENSIVE OR SPECIAL INSPECTIONS, COORDINATION, SUPERVISION, OR SAFETY AT THE JOB SITE.
6. INFORMATION (DETAILING, DIMENSIONS, CONFIGURATIONS, AND ELEVATIONS, ETC.) OF EXISTING CONSTRUCTION SHOWN REFLECTS AVAILABLE EXISTING DESIGN DOCUMENTS, AND DOES NOT NECESSARILY REPRESENT THE AS-CONSTRUCTED CONDITIONS. THE CONTRACTOR SHALL FIELD VERIFY DIMENSIONS, ELEVATIONS AND DETAILING OF THE EXISTING STRUCTURES PRIOR TO UNDERTAKING ANY WORK THAT IS AFFECTED BY THE EXISTING STRUCTURE.NOTIFY ENGINEER IF CONDITIONS VARY FROM THAT SHOWN PRIOR TO STARTING WORK.

INSPECTION AND TESTING

1. ENGINEER OF RECORD FOR WATER TOWER SHALL DETERMINE WHAT SPECIAL INSPECTIONS MAY BE REQUIRED FOR THIS RISK CATEGORY IV STRUCTURE, AND INCLUDE A STATEMENT OF REQUIRED SPECIAL INSPECTIONS
2. SPECIFIED LABORATORY TEST MIXES AND SIMILAR CONFORMANCE TO SPECIFICATIONS, AND SUBMITTED FOR REVIEW PRIOR TO ACCEPTANCE FOR USE ON THE PROJECT, SHALL BE THE RESPONSIBILITY OF THE CONTRACTOR.
3. SPECIAL INSPECTION, TESTING AND OBSERVATION (OWNER FURNISHED) IS REQUIRED IN ACCORDANCE WITH FBC SECTIONS 109, 110, AND 1704.

FOUNDATIONS

1. REFER TO GEOTECHNICAL DATA REPORT UES REPORT NO. 1680586 BY UNIVERSAL ENGINEERING SCIENCES DATES JUNE 21, 2019.
2. EXCAVATIONS SHALL BE SHORED TO PREVENT SUBSIDENCE AND DAMAGE TO ADJACENT EXISTING STRUCTURES, ROADS, UTILITIES, ETC.
3. FOUNDATION SLABS AND SLABS-ON-GRADE SPECIFICALLY NOTES TO BE ON FILL SHALL BEAR ON 6 INCHES OF COMPACTED GRANULAR FILL.
4. FOUNDATION BEARING SURFACES SHALL BE OBSERVED BY THE GEOTECHNICAL ENGINEER OR QUALIFIED DESIGNEE PRIOR TO PLACEMENT OF FORMWORK OF REINFORCING STEEL. THE OBSERVATION SHALL VERIFY IF THE ACTUAL EXPOSED SUBGRADE IS AS ANTICIPATED BY THE SITE SPECIFIC BORINGS, TESTING, AND DATA REPORT.
5. NO BACKFILL SHALL BE PLACED BEHIND WALLS UNTIL THE WALL'S CONCRETE HAS ATTAINED 100 PERCENT AND TOP SUPPORTING SLAB'S CONCRETE HAS ATTAINED 80 PERCENT OF THEIR SPECIFIED 28 DAY COMPRESSIVE STRENGTH, OR UNTIL TOP-OF-WALL FRAMING SYSTEMS, INCLUDING STEEL OR WOOD DIAPHRAGMS, HAVE BEEN COMPLETED
6. NO BACKFILL SHALL BE PLACED BEHIND CANTILEVERED, FREE TOP WALLS UNTIL THE CONCRETE HAS ATTAINED 100 PERCENT OF ITS SPECIFIED 28 DAY COMPRESSIVE STRENGTH.
7. USE OF EXPLOSIVES IS ONLY ALLOWED WITH WRITTEN PERMISSION FROM THE ENGINEER.

FORMWORK, SHORING, AND BRACING

1. STRUCTURES SHOWN ON THE DRAWINGS HAVE BEEN DESIGNED FOR STABILITY UNDER FINAL CONDITIONS ONLY, DESIGN SHOWN DOES NOT INCLUDE NECESSARY COMPONENTS OR EQUIPMENT FOR STABILITY OF THE STRUCTURES DURING CONSTRUCTION. CONTRACTOR IS RESPONSIBLE FOR WORK RELATING TO CONSTRUCTION ERECTION METHODS, BRACING, SHORING, RIGGING, GUYS, SCAFFOLDING, FORMWORK, AND OTHER WORK AIDS REQUIRED TO SAFELY PERFORM THE WORK SHOWN.
2. TEMPORARY SHORING SHALL REMAIN IN PLACE UNTIL ELEVATED CONCRETE FLOOR OR SLABS HAVE REACHED 80 PERCENT OF THE 28 DAY COMPRESSIVE STRENGTH AS DETERMINED BY FIELD CYLINDER BREAKS.
3. "BURY"BARS OR "CARRIER"BARS ARE NOT ALLOWED FOR THE BOTTOM MATS OF REINFORCING IN ALL ELEVATED SLABS AND ARE NOT ALLOWED FOR THE TOP MATS OF REINFORCING IN ELEVATED SLABS LESS THAN 12 INCHES THICK.

CONCRETE REINFORCING

1. REINFORCING STEEL:
   TYPICAL: ASTM A615, GRADE 60
   WELDED: ASTM A706. GRADE 60 (WELDING IS ONLY PERMITTED WITH WRITTEN PERMISSION FROM ENGINEER)
2. FABRICATION AND PLACEMENT OF REINFORCING STEEL SHALL BE IN ACCORDANCE WITH CRSI MSP-1 "MANUAL OF STANDARD PRACTICE"AND ACI 301 "SPECIFICATIONS FOR STRUCTURAL CONCRETE".
3. MINIMUM REINFORCING FOR CONCRETE WALLS AND SLABS SHALL BE AS FOLLOWS:

THICKNESS	REINF EACH WAY	LOCATION
6"	#4 @ 12"	CENTERED
8"	#5 @ 12"	CENTERED
10"	#4 @ 12"	EACH FACE
12"	#5 @ 12"	EACH FACE

   PROVIDE LARGER SIZES AND MORE REINFORCING IN SECTIONS OR CONCRETE WHERE REQUIRED BY THE DETAILS ON THE DRAWINGS OR BY SPECIFICATIONS.
4. CONCRETE COVER FOR REINFORCING, UNLESS SHOWN OTHERWISE, SHALL BE:
   WHEN CAST AGAINST EARTH: 3"
   ALL OTHER SURFACES: 2"
5. 90 DEGREE BENDS, UNLESS OTHERWISE SHOWN, SHALL BE ACI 318 STANDARD HOOKS.
6. REINFORCING STEEL FOR FOOTINGS AND SLABS ON GRADE SHALL BE ADEQUATELY SUPPORTED ON BAR SUPPORTS WITH SPACERS TO KEEP REINFORCING ABOVE THE PREPARED GRADE. LIFTING REINFORCING OFF GRADE DURING CONCRETE PLACEMENT IS NOT PERMITTED.

CONCRETE REINFORCING CONTINUED

7. REINFORCEMENT BENDS AND LAPS, UNLESS OTHERWISE NOTED, SHALL SATISFY THE FOLLOWING MINIMUM REQUIREMENTS:

CONCRETE DESIGN STRENGTH = 4,000 PSI MIN AT 28 DAYS[3] GRADE 60 REINFORCING STEEL										
BAR SIZE		#3	#4	#5	#6	#7	#8	#9	#10	#11
LAP SPLICE LENGTH										
SPACING = 3"	TOP BAR [2]	1'-4"	1'-8"	2'-1"	3'-0"	5'-2"	6'-8"	8'-6"	10'-10"	13'-4"
	OTHER BAR	1'-4"	1'-4"	1'-8"	2'-4"	4'-0"	5'-2"	6'-7"	8'-4"	10'-3"
SPACING = 4"	TOP BAR [2]	1'-4"	1'-8"	2'-0"	2'-5"	3'-10"	5'-0"	6'-5"	8'-1"	10'-0"
	OTHER BAR	1'-4"	1'-4"	1'-7"	1'-10"	3'-0"	3'-11"	4'-11"	6'-3"	7'-8"
SPACING ≥ 6"	TOP BAR [2]	1'-4"	1'-8"	2'-0"	2'-5"	3'-6"	4'-0"	5'-0"	6'-2"	7'-5"
	OTHER BAR	1'-4"	1'-4"	1'-7"	1'-10"	2'-9"	3'-1"	3'-10"	4'-9"	5'-8"
EMBEDMENT LENGTH										
SPACING = 3"	TOP BAR [2]	1'-0"	1'-3"	1'-8"	2'-4"	4'-0"	5'-2"	6'-7"	8'-4"	10'-3"
	OTHER BAR	1'-0"	1'-0"	1'-3"	1'-10"	3'-1"	4'-0"	5'-1"	6'-5"	7'-11"
SPACING = 4"	TOP BAR [2]	1'-0"	1'-3"	1'-7"	1'-10"	3'-0"	3'-11"	4'-11"	6'-3"	7'-8"
	OTHER BAR	1'-0"	1'-0"	1'-3"	1'-5"	2'-4"	3'-0"	3'-10"	4'-10"	5'-11"
SPACING ≥ 6"	TOP BAR [2]	1'-0"	1'-3"	1'-7"	1'-10"	2'-9"	3'-1"	3'-10"	4'-9"	5'-8"
	OTHER BAR	1'-0"	1'-0"	1'-3"	1'-5"	2'-1"	2'-5"	3'-0"	3'-8"	4'-5"

1. LAP LENGTHS ARE BASED ON MINIMUM CONCRETE COVER OF 2". LONGER LENGTHS ARE REQUIRED FOR CONCRETE COVER LESS THAN 2".
2. TOP BARS SHALL BE DEFINED AS ANY HORIZONTAL BARS PLACED SUCH THAT MORE THAN 12 INCHES OF CONCRETE IS CAST IN THE MEMBER BELOW THE BAR IN ANY SINGLE POUR. HORIZONTAL WALL BARS ARE CONSIDERED TOP BARS.
3. WHERE 3000 PSI CONCRETE IS USED, INCREASE ABOVE LENGTHS BY 16 PERCENT. WHERE 3500 PSI CONCRETE IS USED, INCREASE ABOVE LENGTHS BY 7 PERCENT.

CAST IN PLACE CONCRETE

1. 28-DAY COMPRESSIVE STRENGTHS (TO MEET STRUCTURAL STRENGTH REQUIREMENTS):
   COMPOSITE ELEVATED WATER STORAGE TANK
   FOUNDATION: 4,000 PSI
   WALLS: 6,000 PSI
   DOME: 5,000 PSI
   TYPICAL UNLESS OTHERWISE SPECIFIED: 4,000 PSI
   FIBER REINFORCED CONCRETE FILL: 3,500 PSI
   CURBS AND SIDEWALKS: 4,500 PSI
   DUCT BANKS AND PIPE ENCASEMENTS NOT INTEGRAL WITH FOUNDATIONS: 3,500 PSI
2. DESIGN STRENGTHS ARE SAME AS 28-DAY COMPRESSIVE STRENGTH.
3. ROUGHEN AND CLEAN CONSTRUCTION JOINTS IN WALLS AND SLABS AS SPECIFIED PRIOR TO PLACING ADJACENT CONCRETE.
4. COORDINATE PLACEMENT OF OPENINGS, PIPE PENETRATIONS, CURBS, DOWELS, SLEEVES, CONDUITS, BOLTS AND INSERTS PRIOR TO PLACEMENT OF CONCRETE.
5. NO ALUMINUM CONDUIT OR PRODUCTS CONTAINING ALUMINUM OR ANY OTHER MATERIAL INJURIOUS TO THE CONCRETE SHALL BE EMBEDDED IN THE CONCRETE.
6. PATCH FORM TIE HOLES IN ACCORDANCE WITH DETAILS 0310-051 AND/OR 0310-052.

WELDING

1. WELDS SHALL CONFORM TO AMERICAN WELDING SOCIETY (AWS):
   D1.1, STRUCTURAL WELDING CODE STEEL
   D1.2, STRUCTURAL WELDING CODE ALUMINUM
   D1.3, STRUCTURAL WELDING CODE SHEET STEEL
   D1.4, STRUCTURAL WELDING CODE REINFORCING STEEL
   D1.6, STRUCTURAL WELDING CODE STAINLESS STEEL
2. REPAIR WELDS FOUND DEFECTIVE IN ACCORDANCE WITH AWS D1.1 SECTION 5.26
3. USE INTERMITTENT WELDS AT FIELD WELDS OF EMBED PLATES AND ANGLES TO AVOID SPALLING OR CRACKING OF THE EXISTING CONCRETE.
4. BUTT JOINT WELDS SHALL BE COMPLETE JOINT PENETRATION (CJP) UNLESS INDICATED OTHERWISE.

NO.	DATE	REVISION	BY	APVD
DSGN	S. TATMAN	DR	S. TATMAN	CHK	D. EVERSON	APVD	J. MAXFIELD

REUSE OF DOCUMENTS: THIS DOCUMENT, AND THE IDEAS AND DESIGNS INCORPORATED HEREIN, AS AN INSTRUMENT OF PROFESSIONAL SERVICE, IS THE PROPERTY OF CH2M HILL AND IS NOT TO BE USED, IN WHOLE OR IN PART, FOR ANY OTHER PROJECT WITHOUT THE WRITTEN AUTHORIZATION OF CH2M HILL.
©CH2M HILL 2018. ALL RIGHTS RESERVED.

ANITOCH ROAD COMPOSITE WATER TOWER
PUBLIC SERVICES
CITY OF CRESTVIEW
CRESTVIEW, FLORIDA

JACOBS

CIVIL
ANTIOCH WATER TOWER
STRUCTURAL NOTES AND LEGEND

VERIFY SCALE
BAR IS ONE INCH ON ORIGINAL DRAWING.
0 1"

DATE	MARCH 2021
PROJ	D3282100
DWG	G-03
SHEET	3 of 21

BID DOCUMENTS

STRUCTURAL STEEL AND METAL FABRICATIONS

1. STRUCTURAL STEEL SHALL CONFORM TO THE FOLLOWING ASTM STANDARDS:

W-SHAPES	A992
MISCELLANEOUS SHAPES INCLUDING:	
ANGLES, CHANNELS, PLATES, ETC.	A36
MOMENT CONNECTION CONTINUITY PLATES	A572, GRADE 50
HOLLOW STRUCTURAL SECTIONS (HSS)	A500, GRADE B
STEEL PIPE	A53, GRADE B
STAINLESS STEEL SHAPES	A276

2. ALUMINUM SHALL CONFORM TO THE FOLLOWING ASTM STANDARDS:

STRUCTURAL SHAPES	B308
PLATES	B209

3. STRUCTURAL STEEL SHALL BE FABRICATED AND ERECTED IN CONFORMANCE WITH THE AISC MANUAL OF STEEL CONSTRUCTION, CURRENT EDITION, AND CURRENT OSHA STANDARDS.

4. FASTENERS SHALL BE HIGH STRENGTH BOLTS CONFORMING TO THE FOLLOWING ASTM STANDARDS EXCEPT WHERE SPECIFICALLY INDICATED OTHERWISE:

UNLESS SHOWN OTHERWISE:	A325-N
SLIP CRITICAL	A325-SC
DIRECT TENSION INDICATORS OR LOAD INDICATOR WASHER	ASTM F959
TENSION CONTROL (TC) BOLTS	ASTM A325 AND ASTM F1852
ANCHOR BOLTS (AB)	
STAINLESS STEEL	F593, AISI TYPE 316, CONDITION CW
STEEL OR GALVANIZED STEEL	F1554, GR 36 / A153
MACHINE BOLTS (MB)	
STEEL	A307
STAINLESS STEEL	F593, AISI TYPE 316, CONDITION CW
GALVANIZED STEEL	A307 / A153
ALUMINUM	F468, ALLOY 2024-T4

5. ITEMS TO BE EMBEDDED IN CONCRETE SHALL BE CLEAN AND FREE OF OIL, DIRT, AND PAINT.

6. NO HOLES OTHER THAN THOSE SPECIFICALLY DETAILED SHALL BE ALLOWED THROUGH STRUCTURAL STEEL MEMBERS. NO CUTTING OR BURNING OF STRUCTURAL STEEL IS PERMITTED WITHOUT THE APPROVAL OF THE ENGINEER.

DEFERRED SUBMITTALS

1. DEFERRED SUBMITTALS ARE THOSE PORTIONS OF THE DESIGN WHICH ARE NOT SUBMITTED AT THE TIME OF PERMIT APPLICATION AND WHICH ARE TO BE SUBMITTED TO THE PERMITTING AGENCY FOR ACCEPTANCE PRIOR TO INSTALLATION OF THAT PORTION OF THE WORK OR ARE REQUIRED TO BE SUBMITTED FOR REVIEW ONLY BY THE ENGINEER.

2. WHERE DEFERRED SUBMITTALS INCLUDE ADDITIONAL MATERIALS, INSTALLATION, ANCHORAGE, OR CERTIFICATION OF COMPONENTS THAT REQUIRE SPECIAL INSPECTION AND/OR STRUCTURAL OBSERVATION TO MEET CODE REQUIREMENTS, THE DEFERRED SUBMITTAL SHALL INCLUDE SPECIFIC LINE ITEMS TO BE ADDED TO THE APPROPRIATE TABLES IN THE PROJECT'S STATEMENT OF SPECIAL INSPECTIONS PLAN IF THEY ARE NOT ALREADY IDENTIFIED.

3. THE FOLLOWING IS A LIST OF DEFERRED SUBMITTALS PER FBC SECTION 107.3.4.1 THAT ARE EXPECTED TO CONTAIN STRUCTURAL CALCULATIONS OR SAFETY RELATED SYSTEM INFORMATION FOR REVIEW TO MEET BUILDING PERMITTING REQUIREMENTS FOR DESIGNED SYSTEMS. PRIOR TO INSTALLATION OF THE INDICATED STRUCTURAL ELEMENT, EQUIPMENT, DISTRIBUTION SYSTEM, OR COMPONENT OR ITS ANCHORAGE, THE CONTRACTOR SHALL SUBMIT THE REQUIRED CALCULATIONS AND SUPPORTING DATA AND DRAWINGS FOR REVIEW AND ACCEPTANCE BY THE ENGINEER. ADDITIONALLY, ACCEPTANCE INDICATED ON THE ENGINEER'S COMMENT FORM, ALONG WITH THE COMPLETED, FINAL SUBMITTAL SHALL THEN BE SUBMITTED BY THE CONTRACTOR TO THE PERMITTING AGENCY AND APPROVED PRIOR TO INSTALLATION OF THESE ITEMS.

SPECIFICATION SECTION	CODE REQUIRED DEFERRED SUBMITTALS FOR REVIEW BY PERMITTING AGENCY
01 88 15	ANCHORAGE AND BRACING
05 05 19	POST INSTALLED ANCHORS
33 16 19	ELEVATED POTABLE-WATER STORAGE TANKS
OTHER	ANY EQUIPMENT OR COMPONENT IN WHICH A TECHNICAL SPECIFICATION REQUIRES SUBMITTAL OF EQUIPMENT OR ANCHORAGE SYSTEM CALCULATIONS

NO.	DATE	REVISION	BY	APVD

DSGN	DR	CHK	APVD
S. TATMAN	S. TATMAN	D. EVERSON	J. MAXFIELD

JACOBS

ANITOCH ROAD COMPOSITE WATER TOWER
PUBLIC SERVICES
CITY OF CRESTVIEW
CRESTVIEW, FLORIDA

CIVIL
ANTIOCH WATER TOWER
STRUCTURAL NOTES AND LEGEND

VERIFY SCALE
BAR IS ONE INCH ON ORIGINAL DRAWING.
0 1"

DATE	MARCH 2021
PROJ	D3282100
DWG	G-04
SHEET	4 of 21

BID DOCUMENTS

REUSE OF DOCUMENTS: THIS DOCUMENT, AND THE IDEAS AND DESIGNS INCORPORATED HEREIN, AS AN INSTRUMENT OF PROFESSIONAL SERVICE, IS THE PROPERTY OF CH2M HILL AND IS NOT TO BE USED, IN WHOLE OR IN PART, FOR ANY OTHER PROJECT WITHOUT THE WRITTEN AUTHORIZATION OF CH2M HILL.

©CH2M HILL 2018. ALL RIGHTS RESERVED.

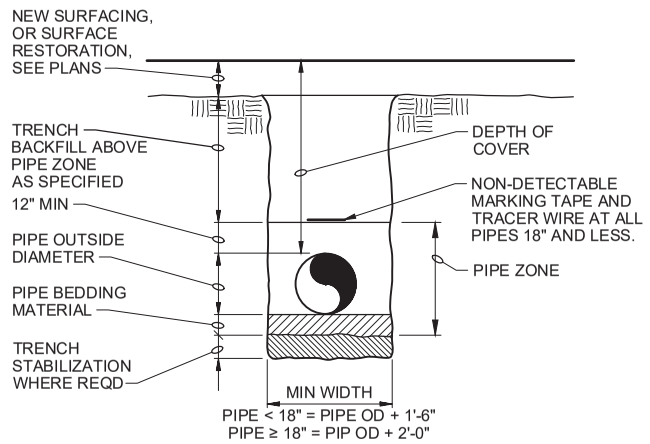

NOTES:

1. CONTRACTOR SHALL SLOPE TRENCH WALLS OR SHORE EXCAVATIONS FOR CONSTRUCTION SAFETY AND IN ACCORDANCE WITH CURRENT OSHA REQUIREMENTS.
2. CONTRACTOR SHALL RECORD ALL HDPE PIPE FIELD WELD LOCATIONS ON DRAWINGS BY USING NORTHING & EASTING COORDINATES AND INVERT ELEVATION (NAVD 88).

TYPICAL TRENCH
NTS

3123-110

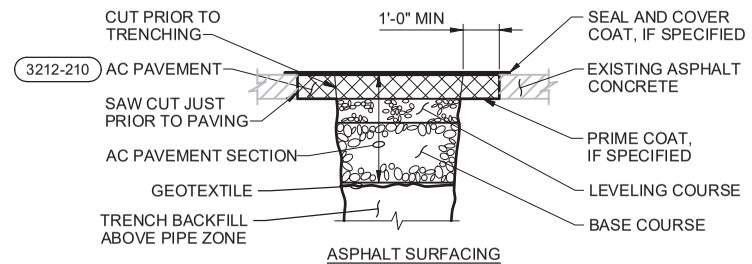

ASPHALT SURFACING

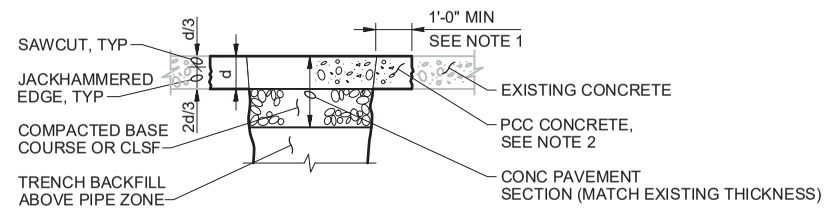

PCC CONCRETE SURFACING

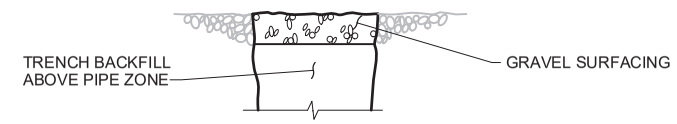

GRAVEL SURFACING

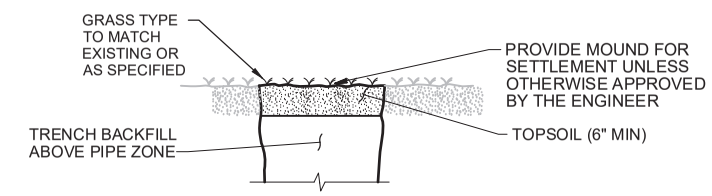

GRASS SURFACING

NOTES:

1. IF LOCATION OF TRENCH SAW CUT IS WITHIN 2 FEET OF AN EXISTING JOINT OR EDGE OF CONCRETE, REPLACE ENTIRE CONCRETE TO THE JOINT OR EDGE.
2. CONSTRUCT JOINTS ACROSS NEW CONCRETE TO MATCH EXISTING JOINT TYPES AND LOCATIONS.

SURFACE RESTORATION
NTS

3123-115

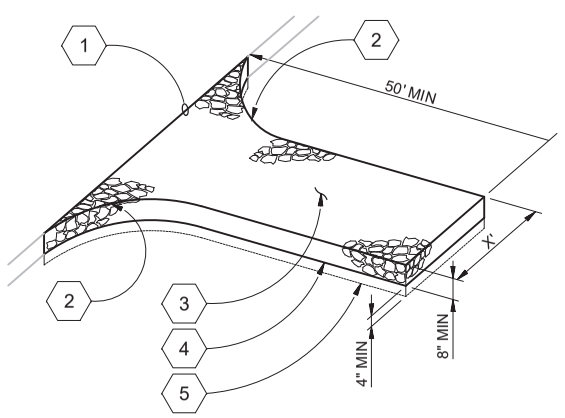

1. EXISTING PAVEMENT OR APPROVED ACCESS POINT.
2. 25' R, MIN.
3. CLEAN PIT RUN OR 2 1/2" MINUS GRAVEL (OR LARGER IF REQUIRED).
4. FREE DRAINING EXCAVATED MATERIAL.
5. GEOTEXTILE, IF SPECIFIED.

NOTES:

A. ADDITION GRAVEL SHALL BE ADDED PERIODICALLY TO MAINTAIN PROPER FUNCTION OF THE PAD.
B. REMOVE GRAVEL ENTRANCE AND REPLACE WITH NEW BASE COURSE TO MATCH COMPLETED ACCESS ROAD.

GRAVEL CONSTRUCTION ENTRANCE
NTS

3125-130

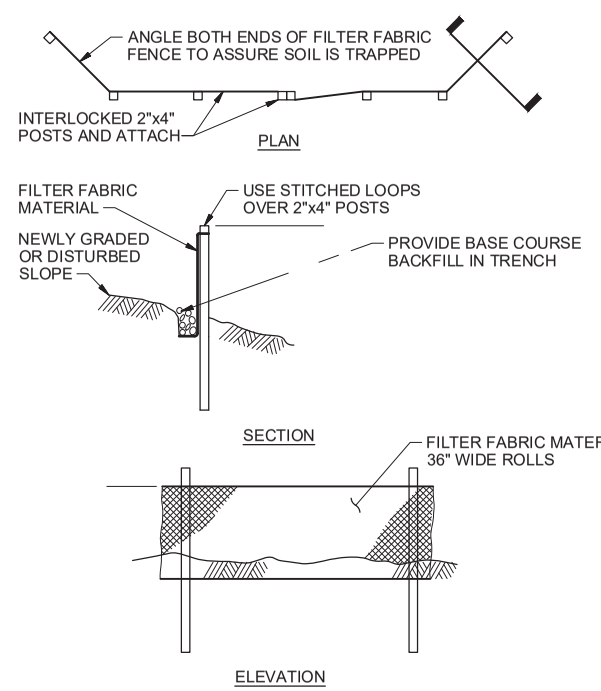

NOTES:

1. BURY BOTTOM OF FILTER FABRIC 6" VERTICALLY BELOW FINISHED GRADE.
2. 2"x4" DOUGLAS FIR OR STEEL FENCE POSTS.
3. STITCHED LOOPS TO BE INSTALLED DOWNHILL SIDE OF SLOPE.
4. COMPACT ALL AREAS OF FILTER FABRIC TRENCH.

SEDIMENT FENCE
NTS

3125-165

NO.	DATE	REVISION	BY	APVD
DSGN	S. TATMAN	DR	S. TATMAN	CHK	J. NESSL	APVD	S. JERNIGAN

ANITOCH ROAD COMPOSITE WATER TOWER
PUBLIC SERVICES
CITY OF CRESTVIEW
CRESTVIEW, FLORIDA

JACOBS

GENERAL
ANTIOCH WATER TOWER
DETAILS

VERIFY SCALE
BAR IS ONE INCH ON ORIGINAL DRAWING.
0 1"

DATE	MARCH 2021
PROJ	D3282100
DWG	G-05
SHEET	5 of 21

BID DOCUMENTS

REUSE OF DOCUMENTS: THIS DOCUMENT, AND THE IDEAS AND DESIGNS INCORPORATED HEREIN, AS AN INSTRUMENT OF PROFESSIONAL SERVICE, IS THE PROPERTY OF CH2M HILL AND IS NOT TO BE USED, IN WHOLE OR IN PART, FOR ANY OTHER PROJECT WITHOUT THE WRITTEN AUTHORIZATION OF CH2M HILL.
©CH2M HILL 2018. ALL RIGHTS RESERVED.

$PWURL $PWPATH FILENAME: 01-G-05_D3282100.DWG PLOT DATE: $PLOTDATE PLOT TIME: $PLOTTIME

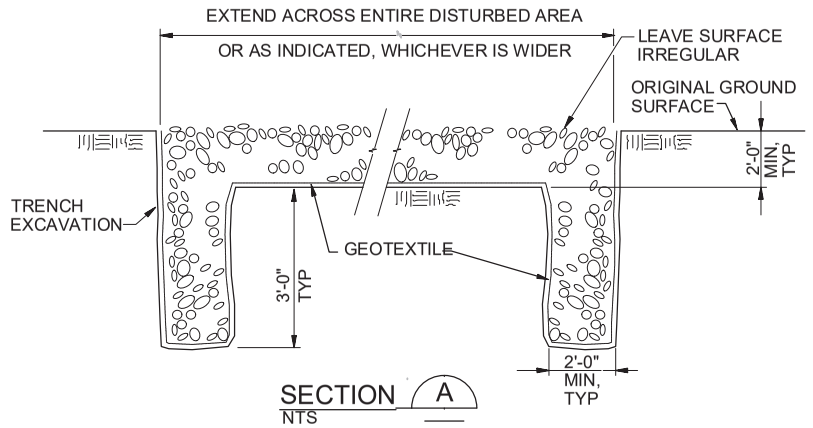

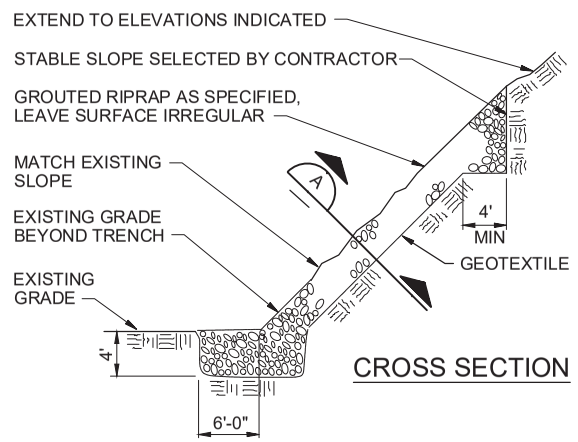

RIP RAP PIPE END TREATMENT
NTS

3127-925

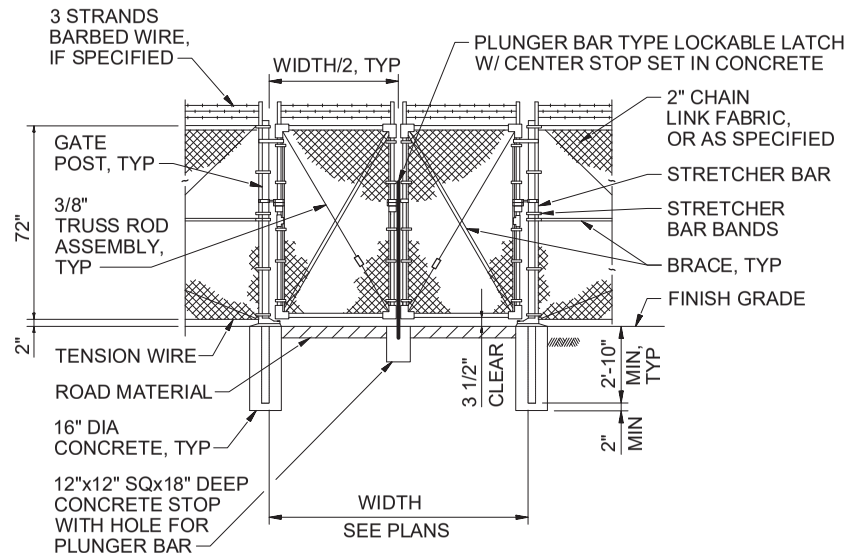

DOUBLE SWING GATE
NTS

3231-415

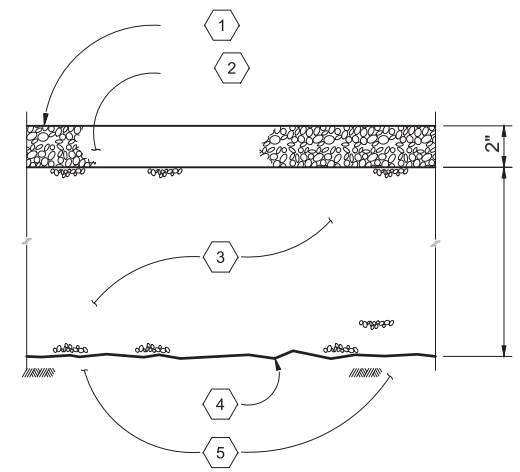

1. FINISH GRADE
2. SURFACING COURSE
3. BASE COURSE
4. GEOTEXTILE (IF SPECIFIED)
5. PREPARED SUBGRADE

GRAVEL ACCESS DRIVE
NTS

3215-260

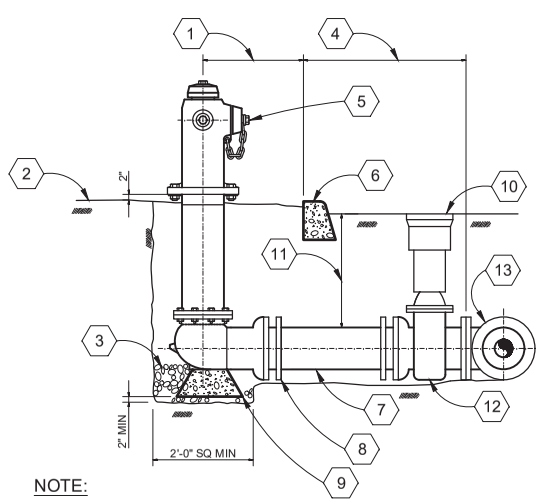

1. 3'-0" UNLESS SHOWN OTHERWISE
2. FINISH GRADE
3. 3/4" DRAIN ROCK TO EL 6" ABOVE WEEP HOLE IN BARREL
4. AS SHOWN OR SPECIFIED
5. NOZZLE THREADS AS SPECIFIED
6. CURB WHERE APPLICABLE
7. 6" WATER LINE
8. MJ HYDRANT OUTLET
9. PRECAST CONC PIER BLOCK, 16" SQ BASE
10. VALVE BOX
11. COVER AS SPECIFIED
12. 6" FLGxMJ GATE VALVE
13. WATER MAIN W/ MJxFLG TEE

NOTE:
ALL JOINTS TO BE RESTRAINED.

FIRE HYDRANT
NTS

3312-770

NO.	DATE	REVISION	BY	APVD

DSGN S. TATMAN | DR S. TATMAN | CHK J. NESSL | APVD S. JERNIGAN

ANITOCH ROAD COMPOSITE WATER TOWER
PUBLIC SERVICES
CITY OF CRESTVIEW
CRESTVIEW, FLORIDA

JACOBS

GENERAL
ANTIOCH WATER TOWER
DETAILS

VERIFY SCALE
BAR IS ONE INCH ON ORIGINAL DRAWING.
0 1"

DATE	MARCH 2021
PROJ	D3282100
DWG	G-06
SHEET	6 of 21

BID DOCUMENTS

REUSE OF DOCUMENTS: THIS DOCUMENT, AND THE IDEAS AND DESIGNS INCORPORATED HEREIN, AS AN INSTRUMENT OF PROFESSIONAL SERVICE, IS THE PROPERTY OF CH2M HILL AND IS NOT TO BE USED, IN WHOLE OR IN PART, FOR ANY OTHER PROJECT WITHOUT THE WRITTEN AUTHORIZATION OF CH2M HILL.
©CH2M HILL 2018. ALL RIGHTS RESERVED.

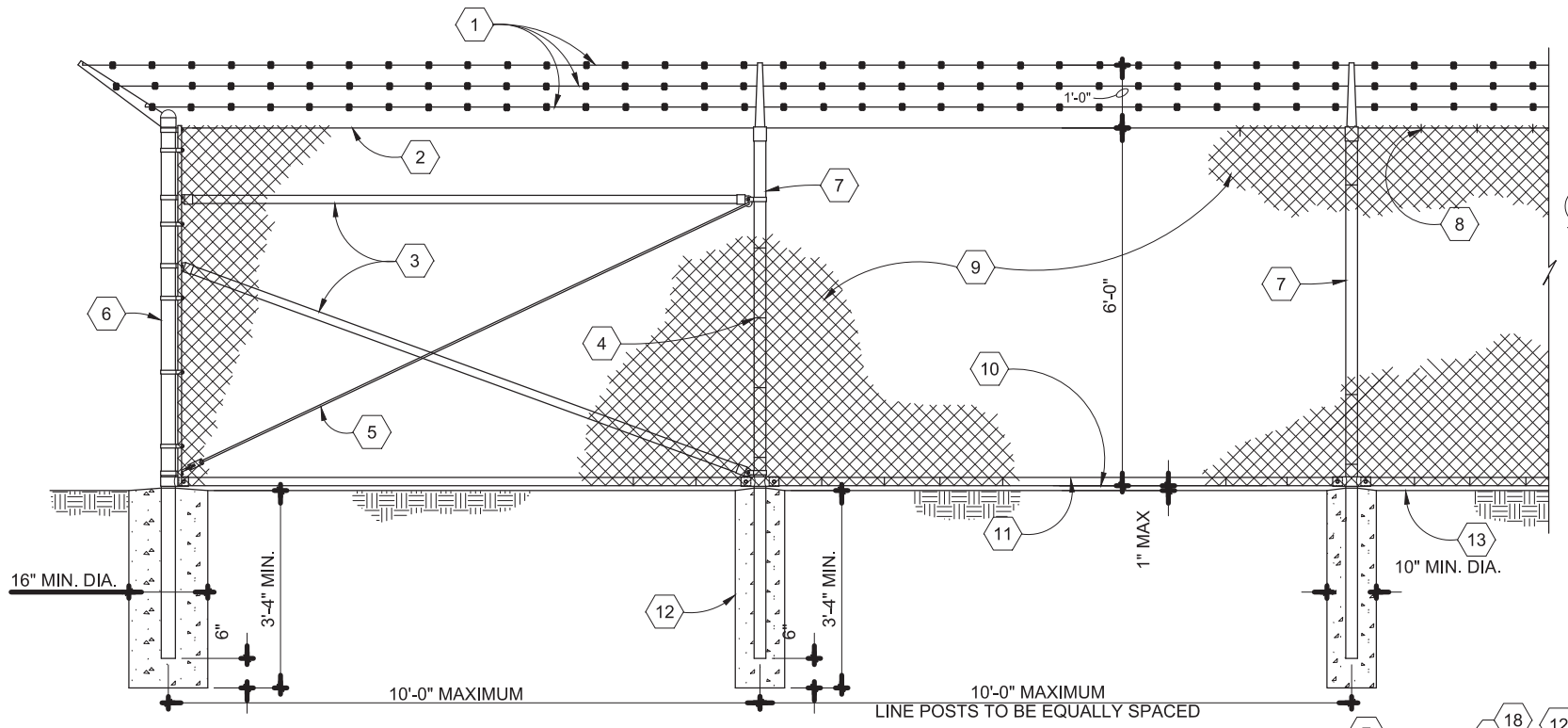

CHAIN-LINK SECURITY FENCE DETAIL
NTS

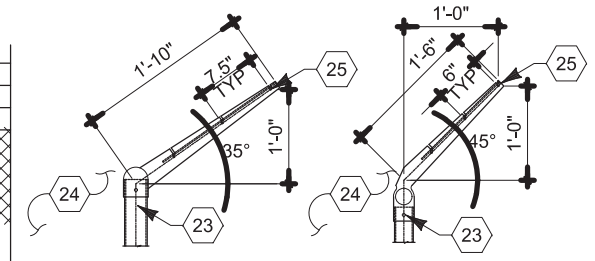

EXTENSION ARM DETAILS
NTS

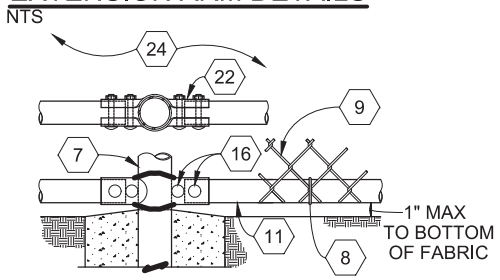

BOTTOM RAIL DETAILS

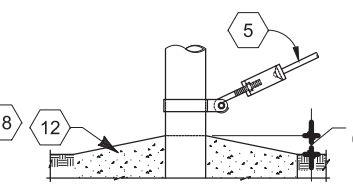

TRUSS ROD AND BAND

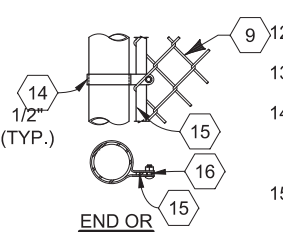

END OR GATE POST DETAIL

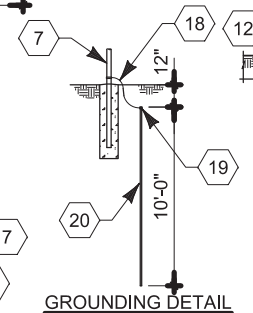

GROUNDING DETAIL

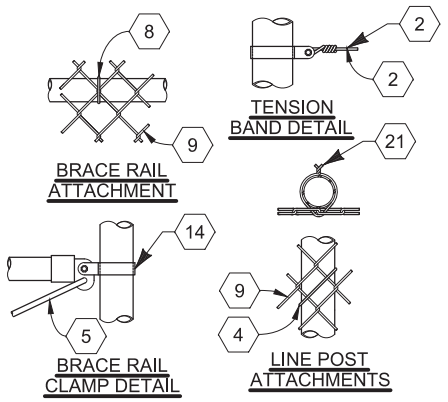

BRACE RAIL ATTACHMENT

TENSION BAND DETAIL

BRACE RAIL CLAMP DETAIL

LINE POST ATTACHMENTS

FASTENING DETAILS

1. 3 STRAND BARBED-WIRE APRON ON EXTENSION ARMS
2. TOP TENSION WIRE
3. BRACE RAIL
4. 9-GAGE STEEL TIE WIRES, 15" O.C. MAX & W/IN 4" FROM TOP & BOTTOM OF FABRIC
5. TRUSS ROD (3/8" MIN. DIA.)
6. CORNER, END, OR PULL POST
7. LINE POST
8. 9-GAGE STEEL TIE WIRES (TYP.),(12" O.C. MAX.)
9. CHAIN-LINK FABRIC (9 GAGE, 2" MESH)
10. BOTTOM OF FABRIC
11. BOTTOM RAIL
12. CONCRETE BASE
13. GRADE LINE
14. TENSION BAND (15" O.C. MAX. & W/IN 4" FROM TOP & BOTTOM OF FABRIC)
15. TENSION BAR TO ENGAGE EACH FABRIC LINK
16. 3/8" CARRIAGE BOLT W/PEENED THREADS
17. PULL POST
18. #8 AWG SOLID COPPER WIRE
19. MOLDED EXOTHERMIC WELD OR APPROVED CLAMP-TYPE FITTING OF COPPER
20. 3/4" DIA. COPPER-CLAD STEEL GROUND ROD
21. ENDS TWISTED AT LEAST THREE FULL TURNS
22. DOUBLE RAIL END
23. 3/8" PLAIN PIN RIVETED FLUSH (TYP.)
24. SECURE SIDE
25. LOCK PIN, TYP

FENCE LEGEND:

TYPE FE5 - CHAIN-LINK FENCE WITHOUT BARBED-WIRE APRON
TYPE FE6 - CHAIN-LINK FENCE W/BARBED-WIRE ON SINGLE OUTRIGGER
TYPE FE7 - CHAIN-LINK FENCE W/BARBED-WIRE ON DOUBLE OUTRIGGER
TYPE FE8 - CHAIN-LINK FENCE W/BARBED-WIRE AND BARBED-TAPE ON DOUBLE OUTRIGGER
TR - FENCE WITH TOP RAIL AND TENSION WIRE AT BOTTOM
TBR - FENCE WITH TOP AND BOTTOM RAILS
TWB - TENSION WIRE TOP AND BOTTOM
TWBR - FENCE WITH TOP TENSION WIRE AND BOTTOM RAIL
FINAL NUMBER IS FABRIC WIDTH IN INCHES.

EXAMPLES:

FE6-TR-72 - CHAIN-LINK SECURITY FENCE WITH BARBED-WIRE ON SINGLE OUTRIGGER, TOP RAIL, AND 72 INCH FABRIC WIDTH.

FE5-TWB-84 - CHAIN-LINK SECURITY FENCE WITH NO APRON, TOP AND BOTTOM TENSION WIRE, AND 84 INCH FABRIC WIDTH.

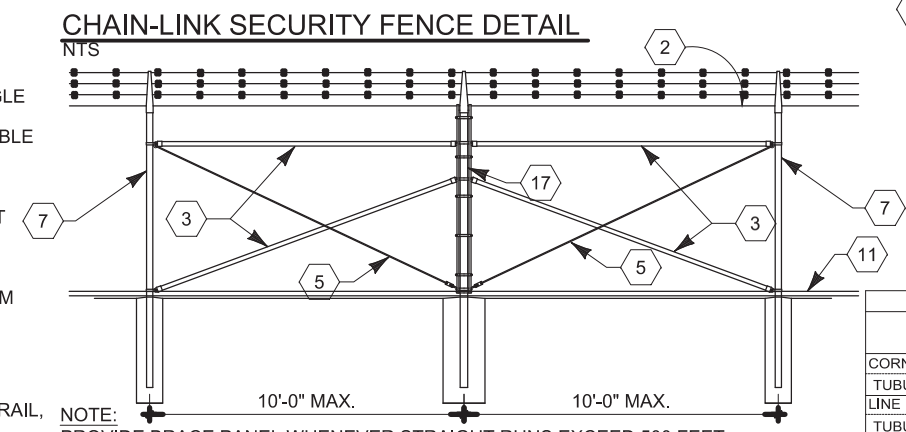

NOTE:
PROVIDE BRACE PANEL WHENEVER STRAIGHT RUNS EXCEED 500 FEET.

BRACE PANEL DETAIL
NTS

STEEL POST SCHEDULE	
USE AND SECTION	MIN OUTSIDE DIMENSIONS (NOMINAL)
CORNER, END & PULL POSTS	
TUBULAR - ROUND	2.375" O.D.
LINE POSTS	
TUBULAR - ROUND	1.90" O.D.
BOTTOM & BRACE RAILS	
TUBULAR - ROUND	1.66" O.D.
TUBULAR - SQUARE	1.50" SQ.
H-SECTION	1.625" x 1.50"
C-SECTION (ROLL-FORMED)	1.625" x 1.25"

NOTES:

A. WIRE TIES, RAILS, POSTS, AND BRACES SHALL BE CONSTRUCTED ON THE SECURE SIDE OF THE FENCE ALIGNMENT. CHAIN-LINK FABRIC SHALL BE PLACED ON THE SIDE OPPOSITE THE SECURE AREA.

B. ONLY 9-GAGE GALVANIZED STEEL TIE WIRES SHALL BE USED FOR FASTENING THE FENCE FABRIC TO FENCE POSTS AND RAILS.16-GAGE, STAINLESS STEEL TIE WIRES SHALL BE USED FOR FASTENING FENCE FABRIC TO TENSION WIRES. HOG RINGS SHALL NOT BE ALLOWED ON SENSORED FENCES.

C. BOTTOM RAIL SHALL BE ATTACHED TO DOUBLE RAIL ENDS USING 3/8"" CARRIAGE BOLTS AS SHOWN. ADDITIONAL HOLES SHALL BE DRILLED THROUGH THE BOTTOM RAIL ENDS TO INSURE THAT CARRIAGE BOLTS PASS THROUGH THE BOTTOM RAIL AS SHOWN.

CHAIN LINK FENCE
NTS

3231-410

NO.	DATE	DR	REVISION	CHK	APVD	BY	APVD
DSGN	S. TATMAN	S. TATMAN		J. NESSL		S. JERNIGAN	

JACOBS

GENERAL
ANTIOCH WATER TOWER DETAILS

ANITOCH ROAD COMPOSITE WATER TOWER
PUBLIC SERVICES
CITY OF CRESTVIEW
CRESTVIEW, FLORIDA

VERIFY SCALE
BAR IS ONE INCH ON ORIGINAL DRAWING.
0 1"

DATE	MARCH 2021
PROJ	D3282100
DWG	G-07
SHEET	7 of 21

BID DOCUMENTS

REUSE OF DOCUMENTS: THIS DOCUMENT, AND THE IDEAS AND DESIGNS INCORPORATED HEREIN, AS AN INSTRUMENT OF PROFESSIONAL SERVICE, IS THE PROPERTY OF CH2M HILL AND IS NOT TO BE USED, IN WHOLE OR IN PART, FOR ANY OTHER PROJECT WITHOUT THE WRITTEN AUTHORIZATION OF CH2M HILL.
©CH2M HILL 2018. ALL RIGHTS RESERVED.

SYMBOL	DESCRIPTION

ONE-LINE DIAGRAM

SYMBOL	DESCRIPTION
	DRAWOUT AIR CIRCUIT BREAKER, LOW VOLTAGE
400	CIRCUIT BREAKER, THERMAL MAGNETIC TRIP SHOWN, 3 POLE, UNO
AS/AF OR AT/AF	CIRCUIT BREAKER, STATIC TRIP UNIT, SENSOR AMP TRIP AND FRAME RATINGS SHOWN, 3 POLE, UNO
100/M	CIRCUIT BREAKER, MAGNETIC TRIP ONLY, TRIP RATING SHOWN, 3 POLE, UNO
400 400	CIRCUIT BREAKER WITH CURRENT LIMITING FUSES, TRIP AND FUSE RATING INDICATED, 3 POLE, UNO
400 225	FUSED SWITCH, SWITCH AND FUSE CURRENT RATING INDICATED, 3 POLE, UNO
100	SWITCH, CURRENT RATING INDICATED, 3 POLE, UNO
60 (3)	FUSE, CURRENT RATING AND QUANTITY INDICATED
1	MAGNETIC STARTER WITH OVERLOAD, NEMA SIZE INDICATED, FVNR UNO
AFD	ELECTRONIC STARTER/SPEED CONTROL RVSS = REDUCED VOLTAGE SOFT STARTER AFD = AC ADJUSTABLE FREQUENCY DRIVE DC = DC ADJUSTABLE SPEED DRIVE RVAT = REDUCED VOLTAGE AUTO TRANSFORMER TYPE RVRT = REDUCED VOLTAGE REACTOR TYPE
	CABLE OR BUS CONNECTION POINT
K	KEY INTERLOCK
	SURGE ARRESTER (GAP TYPE)
10	CAPACITOR - KVAR INDICATED, 3 PHASE
3	AC MOTOR, SQUIRREL CAGE INDUCTION - HORSEPOWER INDICATED
G 500/625	GENERATOR, KW/KVA RATING SHOWN
VS V 0-600V	ANALOG METER WITH SWITCH - SCALE RANGE SHOWN V = VOLTAGE KW = KILOWATTS A = AMPERAGE KVAR = KILOVARS PF = POWER FACTOR
DPM	DIGITAL POWER METER (MULTIFUNCTION)
	UTILITY REVENUE METER
	GROUND
15 KVA 480-120/240V 1 PH	TRANSFORMER, SIZE, VOLTAGE RATINGS, AND PHASE INDICATED
	SHIELDED ISOLATION TRANSFORMER
480-120V (3)	POTENTIAL TRANSFORMER, VOLTAGE RATING AND QUANTITY INDICATED
100:5 (3)	CURRENT TRANSFORMER, RATIO(100:5) AND QUANTITY INDICATED (3)
	CONNECTION POINT TO EQUIPMENT SPECIFIED IN OTHER DIVISIONS. RACEWAY, CONDUCTOR AND CONNECTION IN THIS DIVISION
TVSS	TRANSIENT VOLTAGE SURGE SUPPRESSOR

ONE-LINE DIAGRAM

SYMBOL	DESCRIPTION
	DRAWOUT POWER CIRCUIT BREAKER, MEDIUM VOLTAGE
	NON DRAWOUT FUSED SWITCH, MEDIUM VOLTAGE
	DRAWOUT FUSED SWITCH AND CONTACTOR, MEDIUM VOLTAGE
	DRAWOUT FUSED SWITCH AND VACUUM CONTACTOR, MEDIUM VOLTAGE
	DRAWOUT VACUUM CONTACTOR, MEDIUM VOLTAGE
	MEDIUM VOLTAGE CABLE STRESS CONE TYPE TERMINATION, OPEN TERMINATOR OR ELBOW
	SWITCH - LOAD BREAK, GROUP OPERATED, MEDIUM VOLTAGE
	SWITCH W/ARCING HORNS, MEDIUM VOLTAGE
	DISCONNECTING FUSE - SOLID MATERIAL, MEDIUM VOLTAGE
	SWITCH - HOOK STICK OPERATED, SINGLE POLE, MEDIUM VOLTAGE
	FUSE - EXPULSION, HOOK STICK OPERATED, SINGLE POLE, MEDIUM VOLTAGE
	GROUND SWITCH, GANG OPERATED
	TERMINAL BLOCK LUG
	DELTA CONNECTION
	WYE GROUNDED CONNECTION, SOLID GROUND
R or Z	WYE NEUTRAL GROUND RESISTOR OR IMPEDANCE CONNECTION
86	RELAY OR DEVICE, FUNCTION NUMBER AS INDICATED
50:5 (1)	CURRENT TRANSFORMER, ZERO SEQUENCE, RATIO AND QUANTITY INDICATED
800/1200:5 (3)	BUSHING CURRENT TRANSFORMER, MULTI-RATIO AND QUANTITY INDICATED
MO	MOTOR OPERATOR, BREAKER OR SWITCH
EUM	ENERGY MONITORING UNIT
MRP	MOTOR PROTECTION RELAY

NOTES:

1. THESE ARE STANDARD LEGEND SHEETS. SOME SYMBOLS AND ABBREVIATIONS MAY APPEAR ON THE LEGEND AND NOT ON THE DRAWINGS.
2. FOR ADDITIONAL ABBREVIATIONS OF OTHER DIVISIONS (HVAC, MECHANICAL, AND STRUCTURAL/ARCHITECTURAL) SEE OTHER LEGENDS.

POWER SYSTEM PLAN

SYMBOL	DESCRIPTION
	CONNECTION POINT TO EQUIPMENT SPECIFIED. RACEWAY, CONDUCTOR,TERMINATION AND CONNECTION IN THIS DIVISION.
MCC-A	MAJOR ELECTRICAL COMPONENT OR DEVICE - NAME OR IDENTIFYING SYMBOL AS SHOWN.
LPXXA	PANELBOARD - SURFACE MOUNTED PANELBOARD LETTER OR NUMBER FACILITY NUMBER LP - LOW VOLTAGE PANEL DP - DISTRIBUTION PANEL
	PANELBOARD - FLUSH MOUNTED
	TERMINAL JUNCTION BOX
M	MOTOR, SQUIRREL CAGE INDUCTION
G	GENERATOR, VOLTAGE AND SIZE AS INDICATED.
LPXXA	HOME RUN - DESTINATION SHOWN
or G	EXPOSED CONDUIT AND CONDUCTORS*
- - - - - or G	CONCEALED CONDUIT AND CONDUCTORS*
G	CROSSHATCHES WITH BAR INDICATE NO.10 CONDUCTOR. SIZE CONDUIT ACCORDING TO SPECIFICATIONS AND APPLICABLE CODE.
[A1]	CONDUIT AND CONDUCTOR CALLOUT, SEE LEGEND.
	CONDUIT DOWN
	CONDUIT UP
	CONDUIT, STUBBED AND CAPPED
	CONDUIT TERMINATION AT CABLE TRAY
EX	EXISTING CONDUIT/ DUCT BANK
BD	BUS DUCT - SEE SPECIFICATIONS
CE	CONCRETE ENCASED CONDUIT
DB	DIRECT BURIED CONDUIT
FO	FIBER OPTIC CONDUIT
XXXX	CONCRETE ENCASED DUCT BANK WHERE XXXX IS THE DUCT BANK NAME. SEE CIRCUIT AND RACEWAY CODING DEFINITION
	CONCEALED CONDUIT ROUTING AREA
	CONDUIT ROUTING AREA
	CABLE TRAY
T	TRANSFORMER
J or HH	GENERAL CONTROL OR WIRING DEVICE. LETTER SYMBOLS OR ABBREVIATIONS INDICATE TYPE OF DEVICE
CS	CONTROL STATION, SEE CONTROL DIAGRAMS FOR CONTROL DEVICE(S) REQUIRED.
30	NONFUSED DISCONNECT SWITCH, CURRENT RATING INDICATED, 3 POLE
60/40	FUSED DISCONNECT SWITCH, CURRENT RATING INDICATED (60/40, 60=SWITCH RATING / 40=FUSE RATING) 3 POLE
2	COMBINATION CIRCUIT BREAKER AND MAGNETIC STARTER, NEMA SIZE INDICATED

NOTE:

ALL UNMARKED CONDUIT RUNS CONSIST OF TWO NO. 12, ONE NO. 12 GROUND CONDUCTORS IN 3/4" CONDUIT. RUNS MARKED WITH CROSSHATCHES INDICATE NUMBER OF NO. 12 CONDUCTORS. CROSSHATCH WITH SUBSCRIPT "G" INDICATES GREEN GROUND WIRE.

POWER SYSTEM PLAN

SYMBOL	DESCRIPTION
100/40	BREAKER, SEPARATELY MOUNTED, CURRENT RATING INDICATED (100/40, 100 = FRAME SIZE; 40 = TRIP RATING) 3 POLE
C 2	CONTACTOR, MAGNETIC, NEMA SIZE INDICATED
L 30	LIGHTING CONTACTOR, CURRENT RATING INDICATED
2	STARTER, MAGNETIC NEMA SIZE INDICATED
XX 2	CONVENIENCE RECEPTACLE - DUPLEX UNLESS NOTED OTHERWISE WP - WEATHERPROOF C - CLOCK HANGER TL - TWIST LOCK CRE - CORROSION RESISTANT GFCI - GROUND FAULT CIRCUIT INTERRUPTER SUBSCRIPT NUMBER AT RECEPTACLE INDICATES CIRCUIT
	240V RECEPTACLE
	CONVENIENCE RECEPTACLE - QUADRUPLEX
	MULTI OUTLET ASSEMBLY
	DUPLEX CONVENIENCE RECEPTACLE - FLUSH IN FLOOR
	CONVENIENCE RECEPTACLE, PEDESTAL, DUPLEX SINGLE FACE UNLESS INDICATED OTHERWISE
L20R 20	RECEPTACLE, SPECIAL PURPOSE-NEMA CONFIGURATION AND AMPERAGE INDICATED
T	THERMOSTAT
	UTILITY REVENUE METERING FACILITY
EUH	ELECTRIC UNIT HEATER
AC	ELECTRIC AIR CONDITIONER (SELF CONTAINED UNIT)
	UTILITY POLE

LIGHTING SYSTEM PLAN

SYMBOL	DESCRIPTION
1 or 1	LUMINAIRE, SEE SCHEDULE
1	LUMINAIRE, SEE SCHEDULE
1 or	LUMINAIRE WITH INTERNAL BATTERY BACKUP, SEE SCHEDULE
1	STRIP LUMINAIRE, SEE SCHEDULE
4 or 4	LUMINAIRE AND POLE, SEE SCHEDULE
5 or 5	WALL MOUNTED LUMINAIRE, SEE SCHEDULE
1	FLOOD LIGHTS - AIM IN THE DIRECTION SHOWN
	STANDBY LIGHTING UNIT, SURFACE MOUNTED, SEE SCHEDULE
XX or	EXIT LIGHTS - FILLED SECTION INDICATES LIGHTED FACE, ARROW INDICATES EGRESS DIRECTIONAL INDICATORS, XX = FIXTURE NUMBER, SEE SCHEDULE
$a or 2a	SMALL LETTER SUBSCRIPT AT SWITCH AND LUMINAIRE INDICATES SWITCHING. SUBSCRIPT NUMBER AT LUMINAIRE INDICATES CIRCUIT
$3	WALL SWITCH: 2- DOUBLE POLE P- PILOT LIGHT 3- THREE WAY K- KEY OPERATED 4- FOUR WAY D- DIMMER WP- WEATHERPROOF CRE- CORROSION RESISTANT EX- EXPLOSIONPROOF L- MOMENTARY 3-WAY M- MOTOR RATED MS- MANUAL STARTER WITH OVERLOADS
OS	OCCUPANCY SENSOR
LC	LIGHTING CONTACTOR
MD	MOTION DETECTOR
PC	PHOTOCELL

NO.	DATE	REVISION	BY	APVD
DSGN	G. YARBERRY	DR G. MESSER	CHK K. HORTON	APVD G. YARBERRY

ANTIOCH ROAD COMPOSITE WATER TOWER
PUBLIC SERVICES
CITY OF CRESTVIEW
CRESTVIEW, FLORIDA

JACOBS

GENERAL
ELECTRICAL
LEGEND SHEET 1

VERIFY SCALE
BAR IS ONE INCH ON ORIGINAL DRAWING.
0 1"

DATE	NOVEMBER 2020
PROJ	D3282100
DWG	G-08
SHEET	8 of 21

90% DOCUMENT

REUSE OF DOCUMENTS: THIS DOCUMENT, AND THE IDEAS AND DESIGNS INCORPORATED HEREIN, AS AN INSTRUMENT OF PROFESSIONAL SERVICE, IS THE PROPERTY OF JACOBS AND IS NOT TO BE USED, IN WHOLE OR IN PART, FOR ANY OTHER PROJECT WITHOUT THE WRITTEN AUTHORIZATION OF JACOBS.
© JACOBS 2019. ALL RIGHTS RESERVED.

LUMINAIRE SCHEDULE

LUMINAIRE SCHEDULE

TYPE	SYMBOL	BASIS OF DESIGN	CATALOG #	# OF LAMPS	VOLTS	MOUNTING
B		AMERICAN ELECTRIC HOLOPHANE	LIGHT FIXTURE: ATB2-40BLEDE15-MVOLT-R3-BK POLE: RRATU-25-6E-BMA-US4-BK-AB	133W LED	MVOLT	POLE
A		HOLOPHANE	WG4LED-10C1000-40K-T3M-MVOLT-PE-ELSW-BKSDP	39W LED	MVOLT	WALL

CIRCUIT AND RACEWAY

GENERAL CIRCUIT CONDUCTOR AND CONDUIT IDENTIFICATION

POWER CIRCUIT CALLOUTS

[P1]	[1/2"FLEX, 2#12, #12G]	[P24]	[1"C, 3#8, 3#14, 1#10G]
[P2]	[3/4"C, 2#12, 1#12G]	[P25]	[1"C, 3#8, 4#14, 1#10G]
[P3]	[3/4"C, 3#12, 1#12G]	[P26]	[1"C, 3#8, 5#14, 1#10G]
[P4]	[3/4"C, 4#12, 1#12G]	[P27]	[1"C, 2#6, 1#10G]
[P5]	[3/4"C, 5#12, 1#12G]	[P28]	[1"C, 3#6, 1#8G]
[P6]	[3/4"C, 6#12, 1#12G]	[P29]	[1"C, 3#6, 2#14, 1#8G]
[P7]	[3/4"C, 7#12, 1#12G]	[P30]	[1 1/4"C, 3#6, 3#14, 1#8G]
[P8]	[3/4"C, 8#12, 1#12G]	[P31]	[1 1/4"C, 3#6, 4#14, 1#8G]
[P9]	[3/4"C, 3#12, 2#14, 1#12G]	[P32]	[1 1/4"C, 3#6, 5#14, 1#8G]
[P10]	[3/4"C, 3#12, 3#14, 1#12G]	[P33]	[1 1/4"C, 3#4, 1#8G]
[P11]	[3/4"C, 3#12, 4#14, 1#12G]	[P34]	[1 1/4"C, 3#4, 3#14, 1#8G]
[P12]	[3/4"C, 3#12, 5#14, 1#12G]	[P35]	[1 1/4"C, 3#4, 5#14, 1#8G]
[P13]	[3/4"C, 3#12, 6#14, 1#12G]	[P36]	[1 1/4"C, 3#3, 1#6G]
[P14]	[1"C, 3#12, 7#14, 1#12G]	[P37]	[1 1/4"C, 3#3, 3#14, 1#6G]
[P15]	[3/4"C, 2#10, 1#10G]	[P38]	[1 1/4"C, 3#2, 1#6G]
[P16]	[3/4"C, 3#10, 1#10G]	[P39]	[1 1/2"C, 3#1, 1#6G]
[P17]	[3/4"C, 3#10, 2#14, 1#10G]	[P40]	[2"C, 3#1, 3#14, 1#6G]
[P18]	[3/4"C, 3#10, 3#14, 1#10G]	[P41]	[2"C, 3#2/0, 1#4G]
[P19]	[3/4"C, 3#10, 4#14, 1#10G]	[P42]	[2"C, 3#3/0, 1#4G]
[P20]	[1"C, 3#10, 5#14, 1#10G]	[P43]	[2"C,3#4/0, 1#3G]
[P21]	[1"C, 2#8, 1#10G]	[P44]	[2"C, 4#2]
[P22]	[1"C, 3#8, 1#10G]	[P45]	[2"C, ANTENNA CABLE]
[P23]	[1"C, 3#8, 2#14, 1#10G]		

MULTICONDUCTOR POWER CABLE CIRCUIT CALLOUTS

[PC1]	[3/4"C, 1 (3C#12, 1#12G) TYPE 2]
[PC2]	[3/4"C, 1 (3C#10, 1#10G) TYPE 2]
[PC3]	[3/4"C, 1 (3C#8, 1#10G) TYPE 2]
[PC4]	[3/4"C, 2 (3C#12, 1#12G) TYPE 2]
[PC5]	[1"C, 2 (3C#10, 1#10G) TYPE 2]
[PC1A]	[3/4"C, 1 (2C#12, 1#12G) TYPE 2]
[PC2A]	[3/4"C, 1 (2C#10, 1#10G) TYPE 2]

EMPTY CONDUIT

[EC-1]	[3/4"C, WITH PULL STRING]
[EC-2]	[1"C, WITH PULL STRING]
[EC-3]	[1 1/4"C, WITH PULL STRING]
[EC-4]	[1 1/2"C, WITH PULL STRING]
[EC-5]	[2"C, WITH PULL STRING]
[EC-6]	[3"C, WITH PULL STRING]
[EC-7]	[4"C, WITH PULL STRING]
[EC-8]	[5"C, WITH PULL STRING]

ANALOG CIRCUIT CALLOUTS

[A1]	[3/4"C, 1 TYPE 3]
[A2]	[3/4"C, 2 TYPE 3]
[A3]	[1"C, 3 TYPE 3]
[A4]	[1 1/4"C, 4 TYPE 3]
[A5]	[1 1/4"C, 5 TYPE 3]
[A6]	[1 1/4"C, 6 TYPE 3]
[A7]	[1 1/2"C, 7 TYPE 3]
[A8]	[1 1/2"C, 8 TYPE 3]
[A9]	[1 1/2"C, 9 TYPE 3]
[A10]	[2"C, 10 TYPE 3]
[A11]	[2"C, 11 TYPE 3]
[A12]	[2"C, 12 TYPE 3]
[A13]	[2"C, 13 TYPE 3]
[A14]	[2"C, 14 TYPE 3]
[A15]	[3/4"C, 1 TYPE 4]
[A16]	[3/4"C, 2 TYPE 4]
[A17]	[1"C, 3 TYPE 4]
[A18]	[1 1/4"C, 4 TYPE 4]
[A19]	[1 1/4"C, 5 TYPE 4]
[A20]	[1 1/4"C, 6 TYPE 4]
[A21]	[1 1/2"C, 7 TYPE 4]
[A22]	[1 1/2"C, 8 TYPE 4]
[A23]	[2"C, 9 TYPE 4]
[A24]	[3/4"C, 1-4 pr. TYPE 5]
[A25]	[1"C, 2-4 pr. TYPE 5]

CONTROL CIRCUIT CALLOUTS

[C1]	[3/4"C, MSC]
[C2]	[3/4"C, 2#14, 1#14G]
[C3]	[3/4"C, 3#14, 1#14G]
[C4]	[3/4"C, 4#14, 1#14G]
[C5]	[3/4"C, 5#14, 1#14G]
[C6]	[3/4"C, 6#14, 1#14G]
[C7]	[3/4"C, 7#14, 1#14G]
[C8]	[3/4"C, 8#14, 1#14G]
[C9]	[3/4"C, 9#14, 1#14G]
[C10]	[3/4"C, 10#14, 1#14G]
[C11]	[3/4"C, 11#14, 1#14G]
[C12]	[3/4"C, 12#14, 1#14G]
[C13]	[3/4"C, 13#14, 1#14G]
[C14]	[1"C, 14#14, 1#14G]
[C15]	[1"C, 15#14, 1#14G]
[C16]	[1"C, 16#14, 1#14G]
[C17]	[1"C, 17#14, 1#14G]
[C18]	[1"C, 18#14, 1#14G]
[C19]	[1"C, 19#14, 1#14G]
[C20]	[1"C, 20#14, 1#14G]
[C21]	[1"C, 21#14, 1#14G]
[C22]	[1"C, 22#14, 1#14G]
[C23]	[1"C, 23#14, 1#14G]
[C24]	[1 1/4"C, 24#14, 1#14G]
[C25]	[1 1/4"C, 25#14, 1#14G]

MULTICONDUCTOR CONTROL CABLE CIRCUIT CALLOUTS

[CC3]	[3/4"C, 1-3C TYPE 1]
[CC5]	[3/4"C, 1-5C TYPE 1]
[CC7]	[3/4"C, 1-7C TYPE 1]
[CC9]	[1"C, 1-9C TYPE 1]
[CC12]	[1"C, 1-12C TYPE 1]
[CC19]	[1 1/2"C, 1-19C TYPE 1]
[CC25]	[1 1/2"C, 1-25C TYPE 1]
[CC37]	[2"C, 1-37C TYPE 1]
[CCC1]	[1-7C #12 TYPE 1]

NOTES:

1. FOR CABLE TYPES, SEE SPECIFICATIONS.
2. POWER CIRCUIT CALLOUTS ARE BASED ON THE AREA OF THW CONDUCTORS. CONTROL CIRCUIT CALLOUTS ARE BASED ON THE AREAS OF SCHEDULE 40 PVC CONDUIT AND TYPES XHHW & XHHW-2 INSULATION.
3. SIZING OF CONDUCTORS #1AWG AND SMALLER BASED ON AMPACITIES AT 60 DEGREES C, SIZING OF CONDUCTORS #1/0AWG AND LARGER BASED ON AMPACITIES AT 75 DEGREES C.
4. WHERE CIRCUITS ARE UNDERGROUND, DIRECT BURIED OR CONCRETE ENCASED, MINIMUM CONDUIT SIZE SHALL BE 1".
5. FOR METRIC CONDUIT SIZES USE THE FOLLOWING CONVERSION:
   1/2" = 16 mm 1/4" = 35 mm
   3/4" = 21 mm 1 1/2" = 41 mm
   1" = 27 mm 2" = 53 mm

NO.	DATE	REVISION	BY	APVD

DSGN	DR	CHK	APVD
G. YARBERRY	G. MESSER	K. HORTON	G. YARBERRY

ANTIOCH ROAD COMPOSITE WATER TOWER
PUBLIC SERVICES
CITY OF CRESTVIEW
CRESTVIEW, FLORIDA

GENERAL
ELECTRICAL
LEGEND SHEET 2

REUSE OF DOCUMENTS: THIS DOCUMENT, AND THE IDEAS AND DESIGNS INCORPORATED HEREIN, AS AN INSTRUMENT OF PROFESSIONAL SERVICE, IS THE PROPERTY OF JACOBS AND IS NOT TO BE USED, IN WHOLE OR IN PART, FOR ANY OTHER PROJECT WITHOUT THE WRITTEN AUTHORIZATION OF JACOBS.
© JACOBS 2019. ALL RIGHTS RESERVED.

VERIFY SCALE
BAR IS ONE INCH ON ORIGINAL DRAWING.
0 1"

DATE	NOVEMBER 2020
PROJ	D3282100
DWG	G-09
SHEET	9 of 21

90% DOCUMENT

NOTES:

1. EXISTING LOCATIONS OF PIPE SHOWN CONTINUE. PIPE LOCATIONS SHOWN ARE APPROXIMATE. CONTRACTOR SHALL FIELD VERIFY LOCATION OF EXISTING WATER MAINS BEFORE CONSTRUCTION.

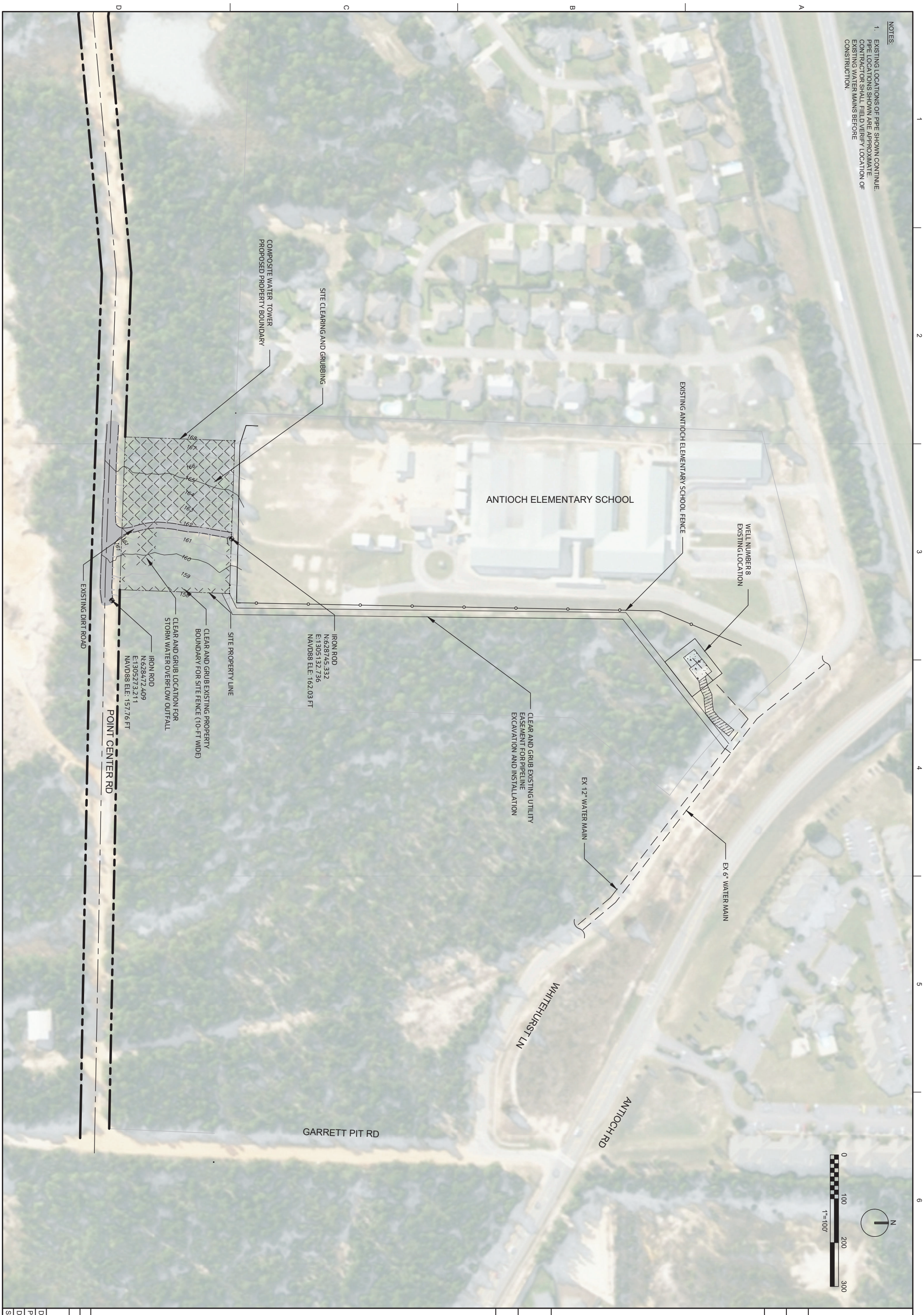

$PWURL $PWPATH

FILENAME: 05-C-01_D3282100.DWG PLOT DATE: $PLOTDATE PLOT TIME: $PLOTTIME

JACOBS

CIVIL

ANTIOCH WATER TOWER
EXISTING CONDTIONS

ANITOCH ROAD COMPOSITE WATER TOWER
PUBLIC SERVICES
CITY OF CRESTVIEW
CRESTVIEW, FLORIDA

NO.	DATE	REVISION	BY	APVD

DSGN	DR	CHK	APVD
S. TATMAN	S. TATMAN	J. NESSL	S. JERNIGAN

VERIFY SCALE
BAR IS ONE INCH ON ORIGINAL DRAWING.
0 1"

DATE MARCH 2021
PROJ D3282100
DWG C-01
SHEET 10 of 21

BID DOCUMENTS

REUSE OF DOCUMENTS: THIS DOCUMENT, AND THE IDEAS AND DESIGNS INCORPORATED HEREIN, AS AN INSTRUMENT OF PROFESSIONAL SERVICE, IS THE PROPERTY OF CH2M HILL AND IS NOT TO BE USED, IN WHOLE OR IN PART, FOR ANY OTHER PROJECT WITHOUT THE WRITTEN AUTHORIZATION OF CH2M HILL.

©CH2M HILL 2018. ALL RIGHTS RESERVED.

NOTES:

1. PROPOSED EROSION CONTROL IS THE MINIMUM REQUIRED. CONTRACTOR SHALL BE RESPONSIBLE FOR ANY ADDITIONAL EROSION CONTROL NEEDED TO ASSURE COMPLIANCE WITH REGULATIONS.
2. FOR CONCRETE TRUCK AND CHEMICAL WASH OUT AREAS AND VEHICLE AND TEMPORARY FUELING, COORDINATE WITH CONSTRUCTION AND ENVIRONMENTAL INSPECTOR TO DETERMINE THE LOCATION OF THE FACILITIES.
3. IMPLEMENT CONSTRUCTION SITE GOOD HOUSEKEEPING PRACTICES TO PREVENT POLLUTION ASSOCIATED WITH SOLID, LIQUID, AND HAZARDOUS CONSTRUCTION RELATED MATERIALS AND WASTES INCLUDING THESE GOOD HOUSE KEEPING PRACTICES:
   - PROVIDE FOR WASTE MANAGEMENT AND SITE LOGISTICS
   - ESTABLISH PROPER BUILDING MATERIALS STAGING AREA
   - DEVELOP A SPILL PREVENTION AND RESPONSE PLAN

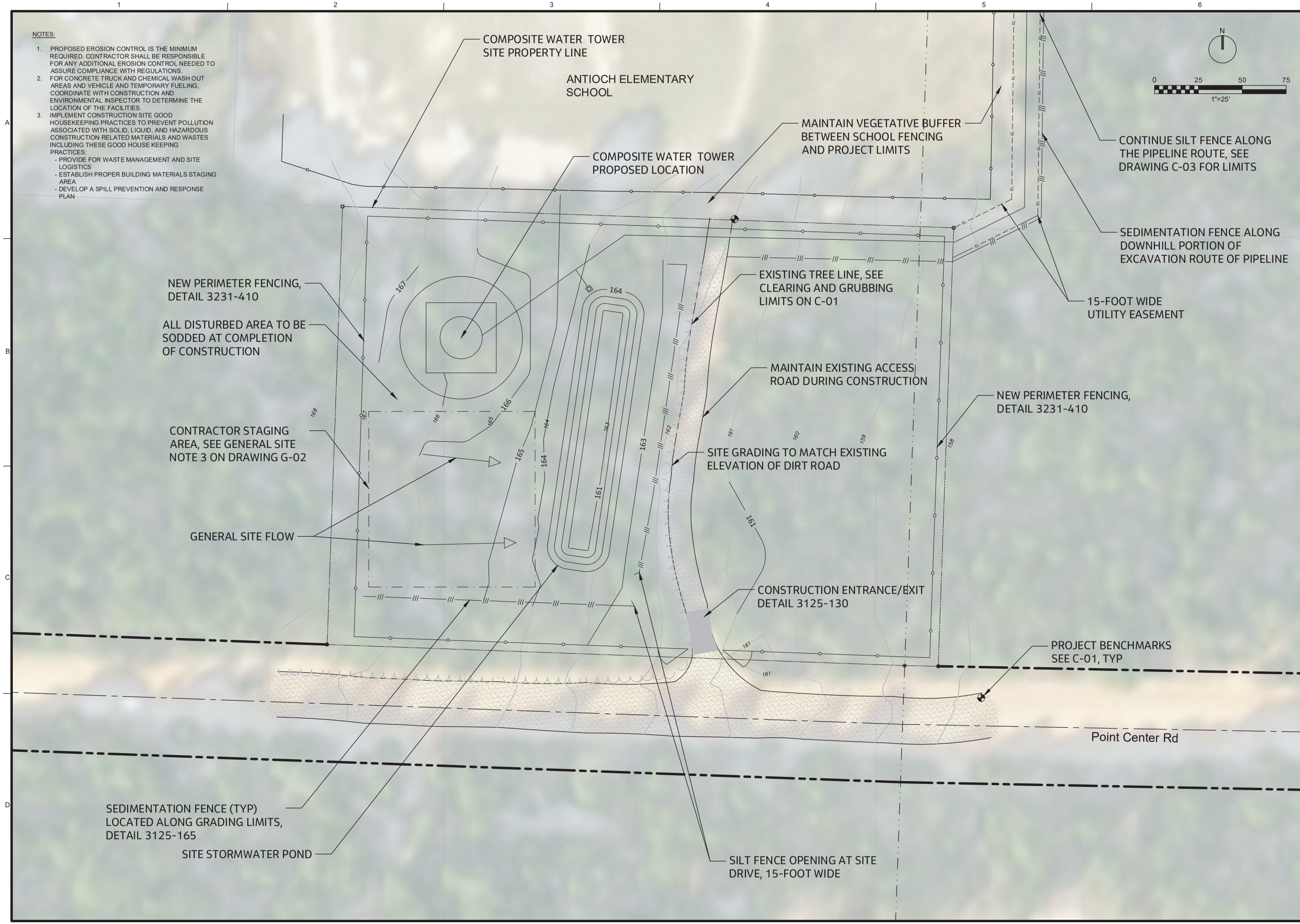

NO.	DATE	REVISION	BY	APVD

DSGN S. TATMAN DR S. TATMAN CHK J. NESSL APVD S. JERNIGAN

ANITOCH ROAD COMPOSITE WATER TOWER
PUBLIC SERVICES
CITY OF CRESTVIEW
CRESTVIEW, FLORIDA

JACOBS

CIVIL
ANTIOCH WATER TOWER GRADING, DRAINAGE, AND EROSION CONTROL PLAN

VERIFY SCALE
BAR IS ONE INCH ON ORIGINAL DRAWING.
0 1"

DATE	MARCH 2021
PROJ	D3282100
DWG	C-02
SHEET	11 of 21

BID DOCUMENTS

REUSE OF DOCUMENTS: THIS DOCUMENT, AND THE IDEAS AND DESIGNS INCORPORATED HEREIN, AS AN INSTRUMENT OF PROFESSIONAL SERVICE, IS THE PROPERTY OF CH2M HILL AND IS NOT TO BE USED, IN WHOLE OR IN PART, FOR ANY OTHER PROJECT WITHOUT THE WRITTEN AUTHORIZATION OF CH2M HILL.
©CH2M HILL 2018. ALL RIGHTS RESERVED.

NOTES:

1. CONTRACTOR SHALL LIMIT ALL INTERRUPTION TO EXISTING DISTRIBUTION. CONTRACTOR SHALL NOTIFY PUBLIC SERVICES ONE WEEK BEFORE DISTURBING EXISTING WATER DISTRIBUTION.
2. EXISTING LOCATIONS OF PIPE SHOWN CONTINUE. PIPE LOCATIONS SHOWN ARE APPROXIMATE. CONTRACTOR SHALL FIELD VERIFY LOCATION OF EXISTING WATER MAINS BEFORE CONSTRUCTION.
3. FOR SITE GRADING, REFER TO SHEET C-02.
4. INSTALL MANUAL ARV AT ANY LOCALIZED HIGH POINTS.

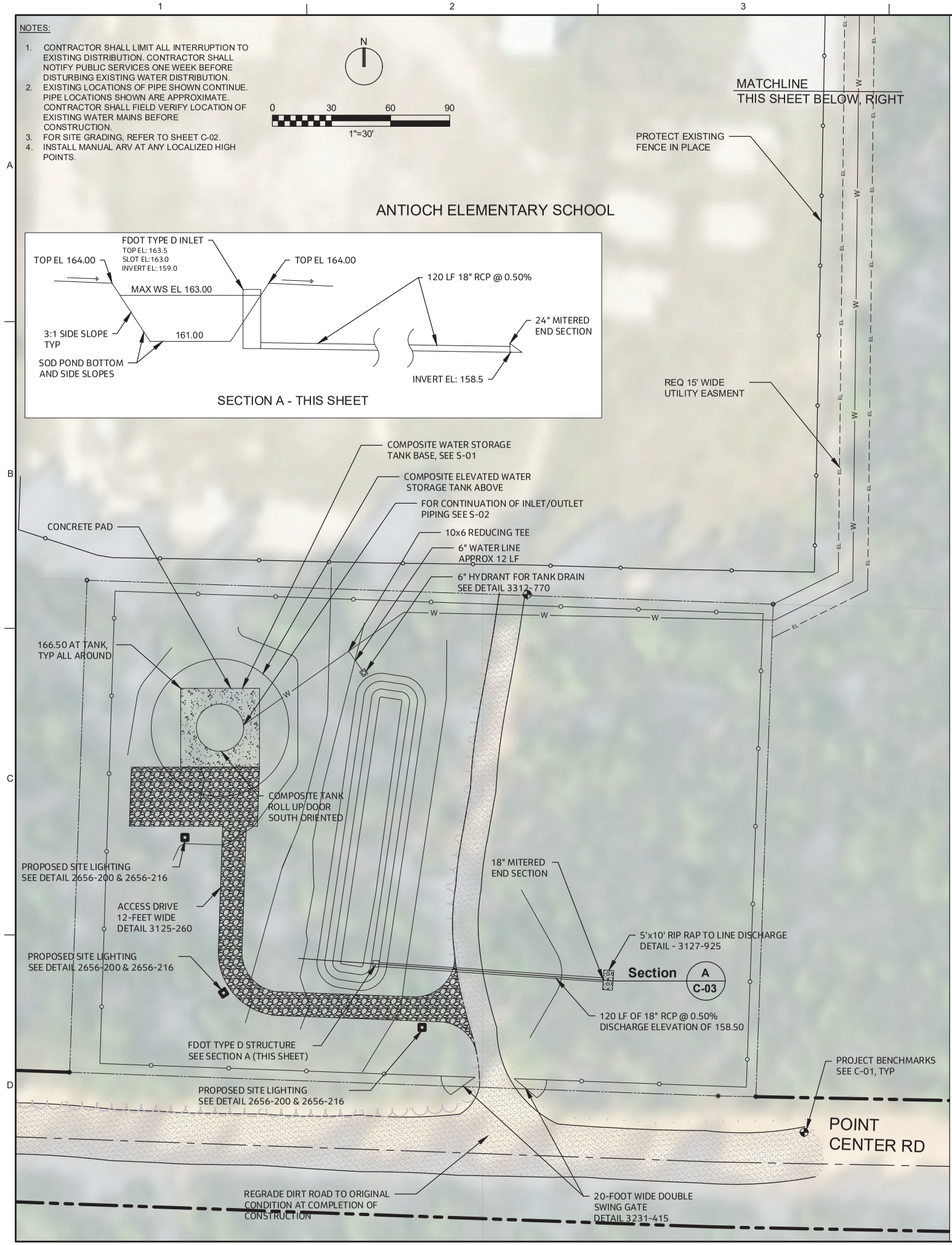

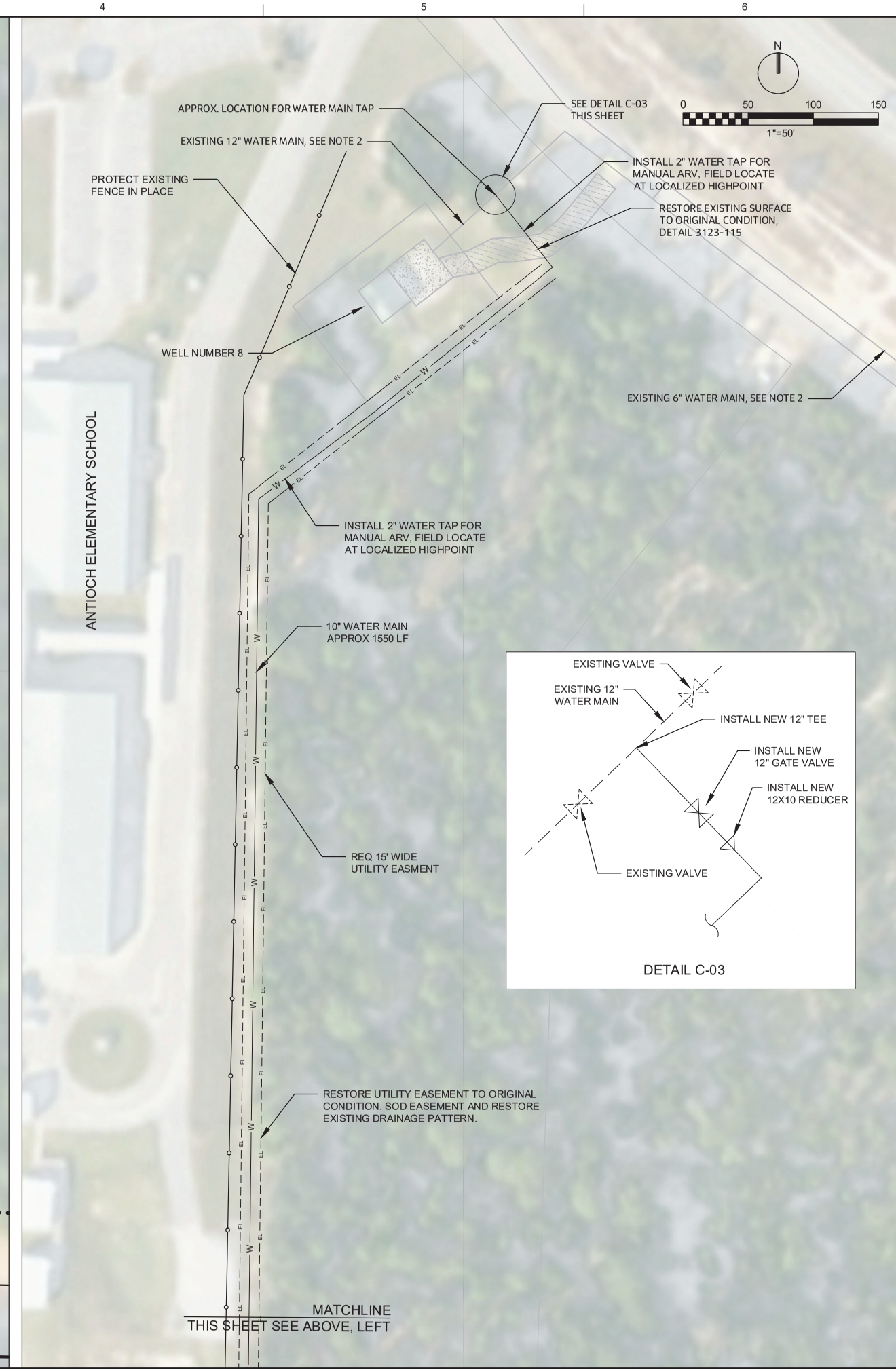

NO.	DATE	REVISION	BY	APVD
DSGN	S. TATMAN	DR S. TATMAN	CHK J. NESSL	APVD S. JERNIGAN

ANITOCH ROAD COMPOSITE WATER TOWER
PUBLIC SERVICES
CITY OF CRESTVIEW
CRESTVIEW, FLORIDA

JACOBS

CIVIL
ANTIOCH WATER TOWER
PROPOSED SITE IMPROVEMENTS

VERIFY SCALE
BAR IS ONE INCH ON ORIGINAL DRAWING.
0 1"

DATE	MARCH 2021
PROJ	D3282100
DWG	C-03
SHEET	12 of 21

BID DOCUMENTS

REUSE OF DOCUMENTS: THIS DOCUMENT, AND THE IDEAS AND DESIGNS INCORPORATED HEREIN, AS AN INSTRUMENT OF PROFESSIONAL SERVICE, IS THE PROPERTY OF CH2M HILL AND IS NOT TO BE USED, IN WHOLE OR IN PART, FOR ANY OTHER PROJECT WITHOUT THE WRITTEN AUTHORIZATION OF CH2M HILL.

©CH2M HILL 2018. ALL RIGHTS RESERVED.

NOTES:

1. CONTRACTOR SHALL LIMIT ALL INTERRUPTION TO EXISTING DISTRIBUTION. CONTRACTOR SHALL NOTIFY PUBLIC SERVICES ONE WEEK BEFORE DISTURBING EXISTING WATER DISTRIBUTION.
2. EXISTING LOCATIONS OF PIPE SHOWN CONTINUE. PIPE LOCATIONS SHOWN ARE APPROXIMATE. CONTRACTOR SHALL FIELD VERIFY LOCATION OF EXISTING WATER MAINS BEFORE CONSTRUCTION.

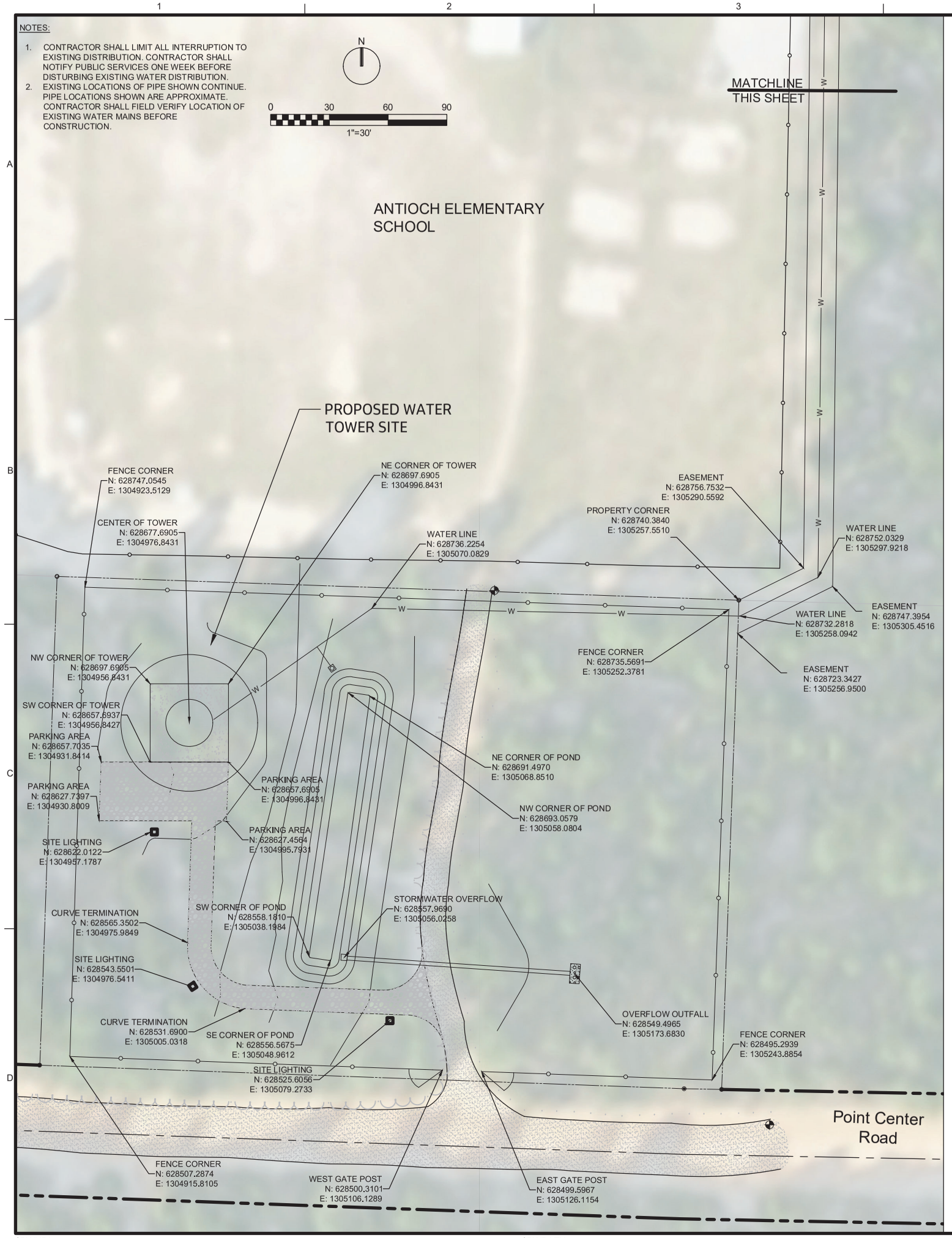

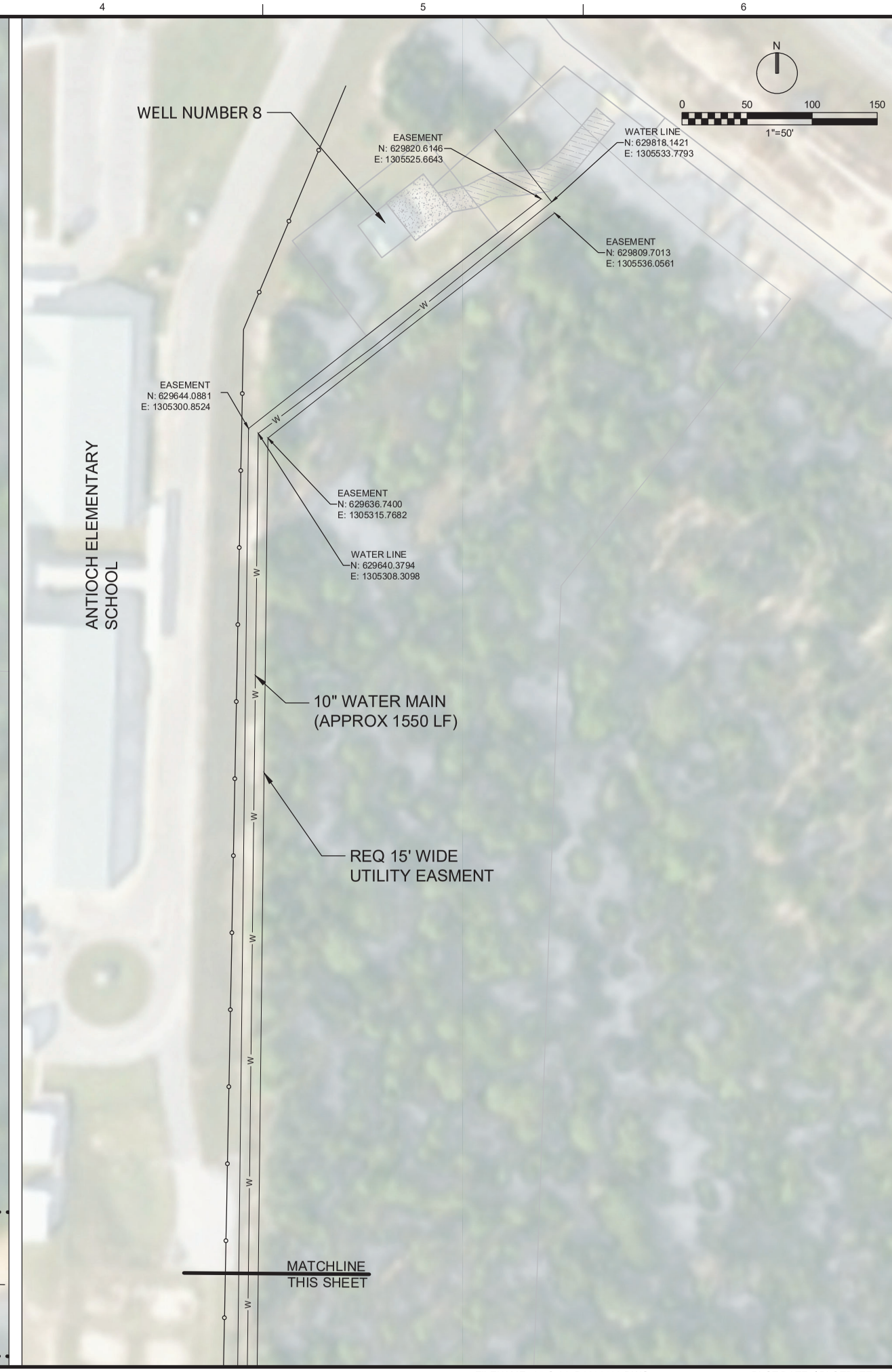

NO.	DATE	REVISION	BY	APVD
DSGN	S. TATMAN	DR	S. TATMAN	CHK	J. NESSL	APVD	S. JERNIGAN

ANITOCH ROAD COMPOSITE WATER TOWER
PUBLIC SERVICES
CITY OF CRESTVIEW
CRESTVIEW, FLORIDA

JACOBS

CIVIL
ANTIOCH WATER TOWER CONTROL PLAN

VERIFY SCALE
BAR IS ONE INCH ON ORIGINAL DRAWING.
0 1"

DATE	MARCH 2021
PROJ	D3291200
DWG	C-04
SHEET	13 of 21

BID DOCUMENTS

REUSE OF DOCUMENTS: THIS DOCUMENT, AND THE IDEAS AND DESIGNS INCORPORATED HEREIN, AS AN INSTRUMENT OF PROFESSIONAL SERVICE, IS THE PROPERTY OF CH2M HILL AND IS NOT TO BE USED, IN WHOLE OR IN PART, FOR ANY OTHER PROJECT WITHOUT THE WRITTEN AUTHORIZATION OF CH2M HILL.

©CH2M HILL 2018. ALL RIGHTS RESERVED.

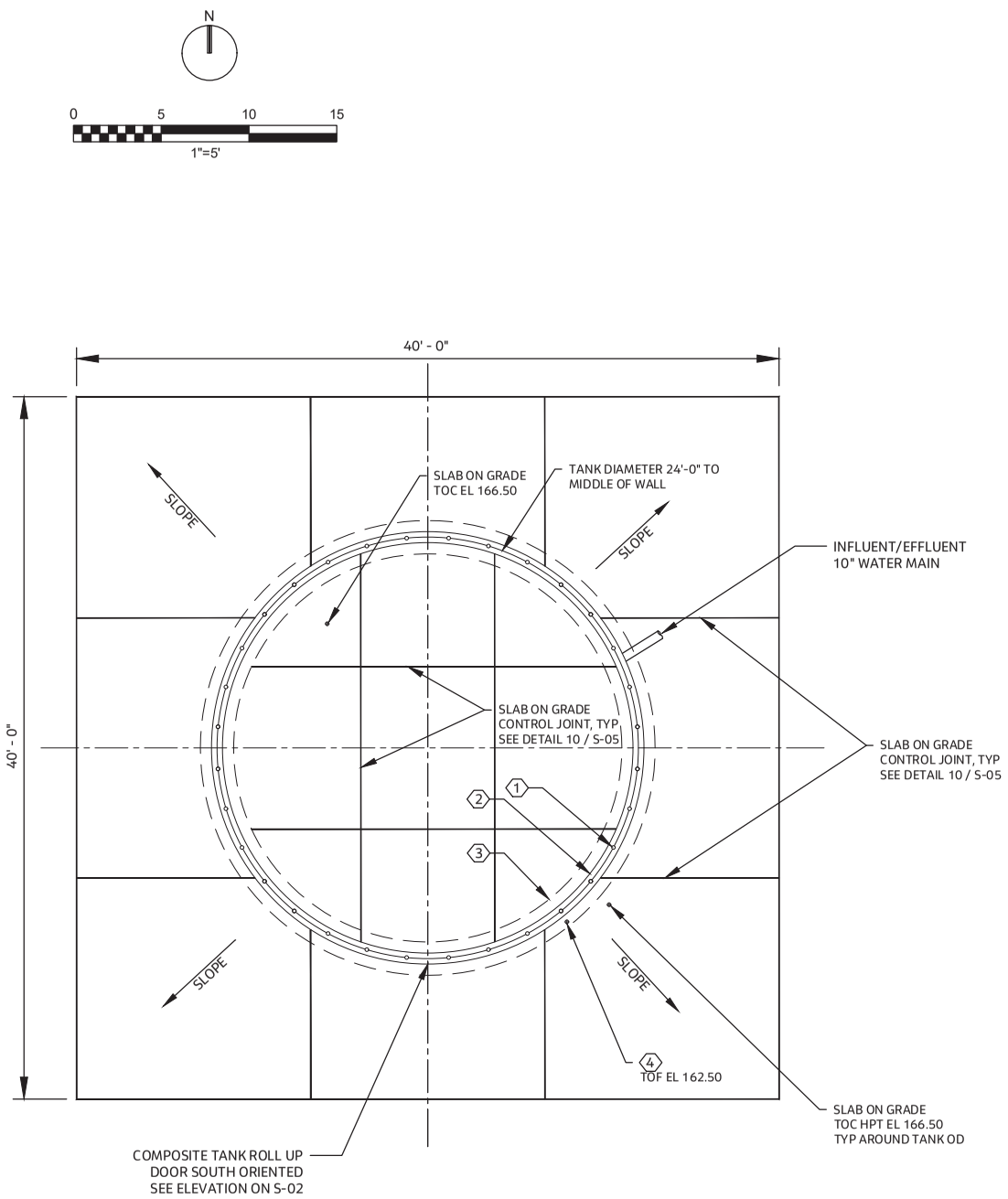

TANK FOUNDATION PLAN

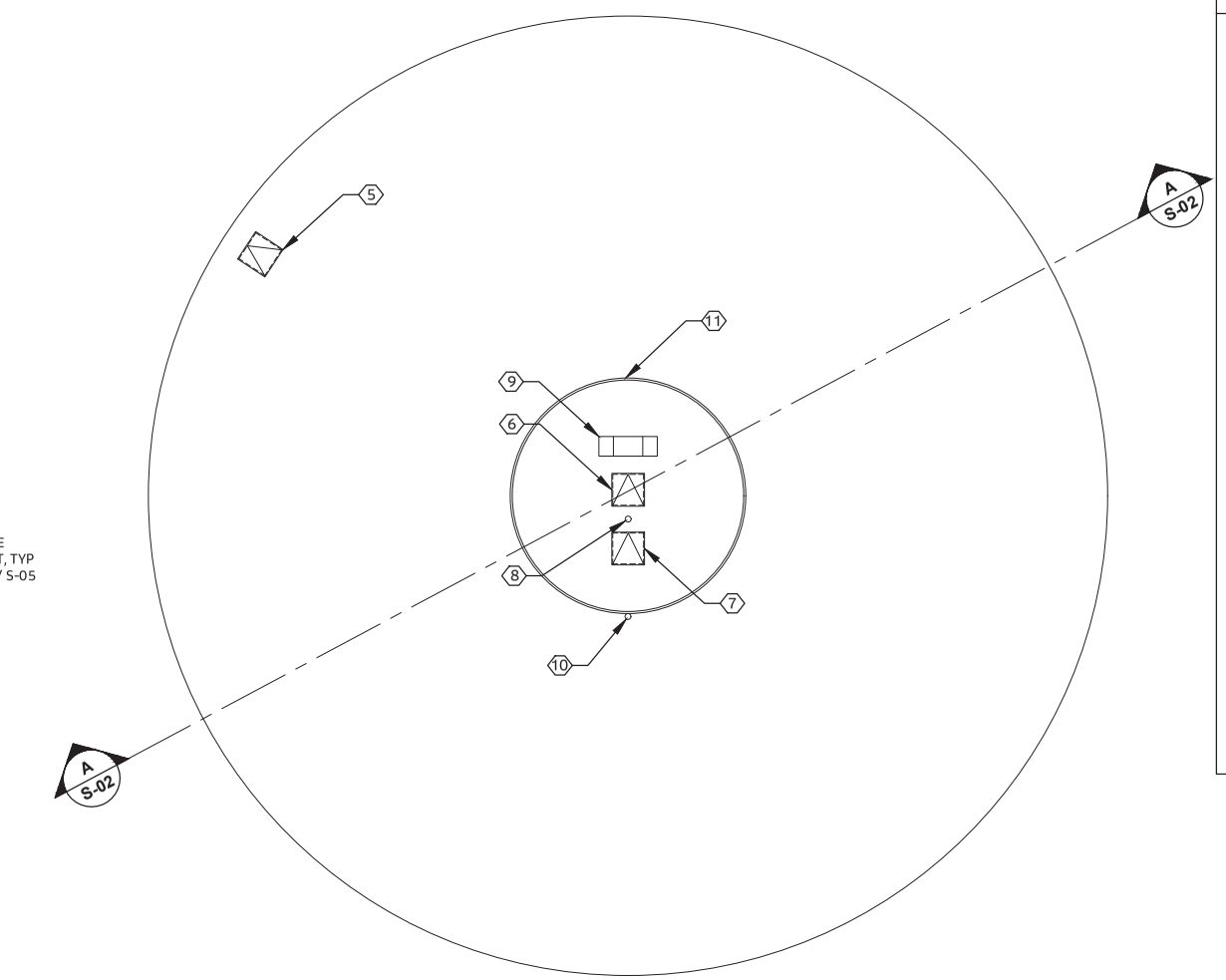

TANK ROOF PLAN

NOTE:

1. CONFIGURATIONS OF ROOF ITEMS BASED ON LANDMARK TANKS WHICH IS THE BASIS OF DESIGN.

GENERAL NOTES

1. TANK DESIGN SHALL BE IN ACCORDANCE WITH AWWA D1073.
2. DESIGN LOADS SHALL BE IN ACCORDANCE WITH AWWA D107 AND ASCE7.
3. WHERE FOUNDATION WALL IS EXPOSED TO VIEW, SURFACE SHALL MATCH TANK WALL SUPPORTED ABOVE INCLUDING RUSTIFICATION PATTERNS.
4. REFERENCED DETAILS ARE SCHEMATIC AND SHOW GENERAL CONDITIONS ONLY. FINAL DESIGN OF DETAILS SHALL BE THE RESPONSIBILITY OF THE TANK MANUFACTURER.

KEYNOTES

1. AUGER CAST CONCRETE PILES AS REQUIRED BY TANK MANUFACTURER. COORDINATE WITH GEOTECHNICAL REPORT FOR FINAL SELECTION OF PILE DIAMETER, TIP ELEVATION, QUANTITY, AND ALLOWABLE COMPRESSIVE AND UPLIFT CAPACITIES. FOR MINIMUM PILE REQUIREMENTS, SEE DETAIL 8 / S-04.
2. REINFORCED CONCRETE SUPPORT WALL BEARING ON CONTINUOUS FOOTING. ANCHORAGE OF WALL TO FOOTING SHALL BE DESIGNED BY TANK MANUFACTURER.
3. CAST IN PLACE CONCRETE CONTINUOUS PILE SUPPORTED FOOTING. FOOTING DIMENSIONS AND REINFORCEMENT SHALL BE DESIGNED BY TANK MANUFACTURER.
4. PRELIMINARY TOP OF FOOTING (TOF) SHOWN 4'-0" BELOW INTERIOR SLAB-ON-GRADE ELEVATION. FINAL FOOTING ELEVATION TO BE COORDINATED BY TANK MANUFACTURER.
5. 36" X 36" CLEAR PAINT RAIL ACCESS HATCH, SEE DETAIL 7/S-04
6. 30" X 30" CLEAR ACCESS TUBE HATCH, SEE DETAIL 7/S-04
7. 30" X 30" CLEAR TANK ACCESS HATCH, SEE DETAIL 7/S-04
8. OBSTRUCTION LIGHT, SEE DETAIL 2/S-03
9. TANK VENT, SEE DETAIL 3/S-03
10. ANTENNA MOUNT, SEE DETAIL 5/S-03
11. ROOF HANDRAIL, SEE DETAIL 1/S-03

NO.	DATE	REVISION	BY	APVD

DSGN S. TATMAN | DR S. TATMAN | CHK D. EVERSON | APVD J. MAXFIELD

ANITOCH ROAD COMPOSITE WATER TOWER
PUBLIC SERVICES
CITY OF CRESTVIEW
CRESTVIEW, FLORIDA

JACOBS

STRUCTURAL
ANTIOCH WATER TOWER
STRUCTURAL PLANS

VERIFY SCALE
BAR IS ONE INCH ON ORIGINAL DRAWING.
0 1"

DATE	MARCH 2021
PROJ	D3282100
DWG	S-01
SHEET	14 of 21

BID DOCUMENTS

REUSE OF DOCUMENTS: THIS DOCUMENT, AND THE IDEAS AND DESIGNS INCORPORATED HEREIN, AS AN INSTRUMENT OF PROFESSIONAL SERVICE, IS THE PROPERTY OF CH2M HILL AND IS NOT TO BE USED, IN WHOLE OR IN PART, FOR ANY OTHER PROJECT WITHOUT THE WRITTEN AUTHORIZATION OF CH2M HILL.
©CH2M HILL 2018. ALL RIGHTS RESERVED.

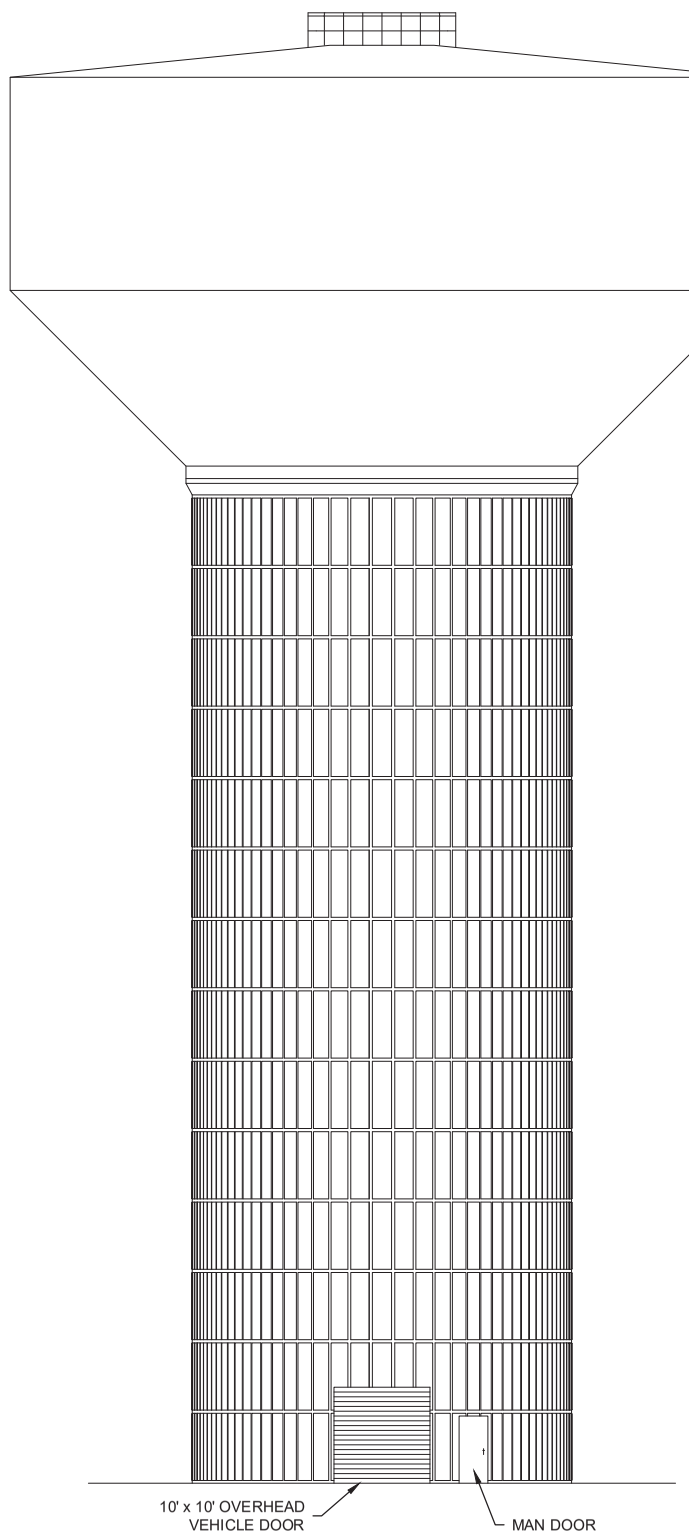

ELEVATION
N.T.S.

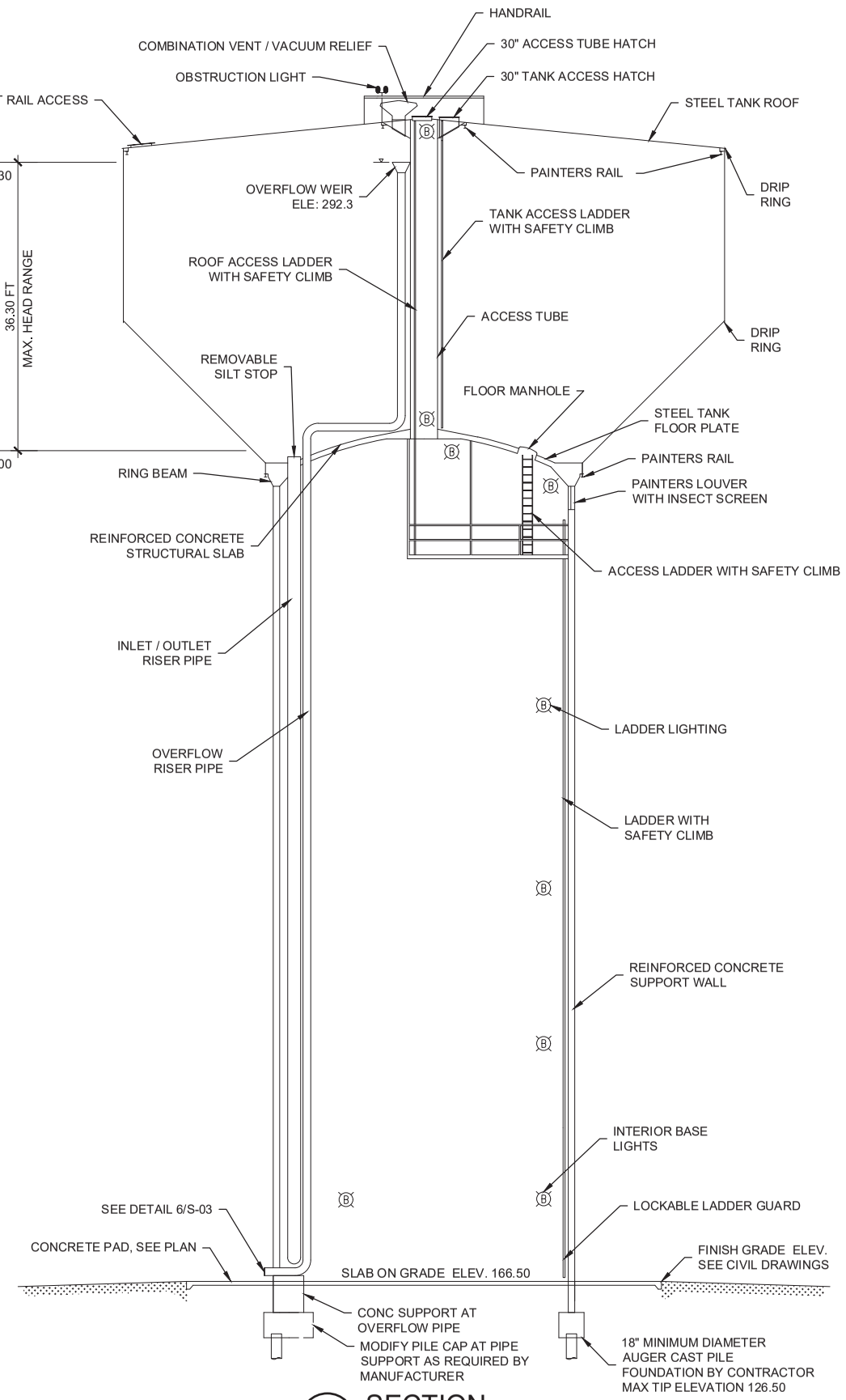

A SECTION
N.T.S.
S-01

NOTES:

GENERAL:

1. ELEVATION, SECTION, AND NOTES SHOWN ARE BASED ON LANDMARK TANKS WHICH IS THE PROJECT BASIS OF DESIGN.
2. SEE CONTRACT SPECIFICATIONS FOR DESIGN CRITERIA AND DETAILS. APPLICABLE ELEVATED TANK SPECIFICATIONS ARE AWWA D107 AND ACI 318.
3. CONCRETE PEDESTAL EXTERIOR SHALL INCORPORATE HORIZONTAL AND VERTICAL RUSTIFICATIONS TO CREATE A SYMMETRICAL ARCHITECTURAL PATTERN. SEE CONTRACT SPECIFICATIONS.
4. SEE CONTRACT SPECIFICATIONS FOR STEEL TANK COATING REQUIREMENTS.
5. TANK APPURTENANCES ARE ROTATED FOR CLARITY.
6. TANK ARCHITECTURAL REVEAL PLAN TO BE SUBMITTED TO OWNER AND ENGINEER FOR APPROVAL.
7. THE PROJECT SHALL COMPLY WITH ALL FLORIDA BUILDING CODE REQUIREMENTS.
8. CONTRACTOR SHALL SURVEY THE OVERFLOW ELEVATION FROM TANK 4 TO VERIFY THE OVERFLOW FROM THE ANTIOCH TANK CORRESPONDS TO THAT ELEVATION.

FOUNDATION:

1. REFER TO THE GEOTECHNICAL REPORT FOR RECOMMENDATIONS REGARDING DEEP FOUNDATION REQUIREMENTS.
2. DESIGN LOADS IN ACCORDANCE WITH AWWA D107.
3. DESIGN CONCRETE FOUNDATION IN ACCORDANCE WITH ACI 318.

MECHANICAL:

1. INLET / OUTLET AND OVERFLOW PIPING WITHIN THE CONCRETE PEDESTAL SHALL BE TYPE 304L STAINLESS STEEL
2. PROVIDE HANGERS, BRACKETS, AND THRUST RESTRAINT AS REQUIRED.
3. OVERFLOW SYSTEM SHALL BE DESIGNED TO ACCOMMODATE MAXIMUM FILL RATE. SEE CONTRACT SPECIFICATION.
4. REMOVABLE SILT STOP SHALL BE 6 INCHES ABOVE PIPE ENTRANCE.
5. PROVIDE 10"X6" TEE WITH 6" GATE VALVE IN INLET/EXIT RISER PIPE. INCLUDE A 6" QUICK CONNECT TO BE USED FOR TANK DRAIN AT 24-INCHES ABOVE GRADE.
6. PROVIDE 2" TAP AND BALL VALVE FOR WATER SAMPLING WITHIN THE STRUCTURE AT 36" ABOVE GROUND LEVEL.

MISCELLANEOUS IRON:

1. ALL LADDERS AND LANDINGS SHALL BE GALVANIZED, ARRANGED FOR STRAIGHT RUN.
2. PROVIDE ALUMINUM SAFETY RAILS ON ALL LADDERS.
3. ROOF ACCESS TUBE AND TANK ACCESS HATCHES SHALL BE 30" SQUARE MINIMUM
4. A REMOVABLE ALUMINUM LOUVER SHALL BE INSTALLED AT THE UPPER LANDING FOR ACCESS TO THE EXTERIOR PAINTER RAIL.

NO.	DATE	REVISION	BY	APVD
DSGN	S. TATMAN	DR S. TATMAN	CHK D. EVERSON	APVD J. MAXFIELD

©CH2M HILL 2018. ALL RIGHTS RESERVED.
REUSE OF DOCUMENTS: THIS DOCUMENT, AND THE IDEAS AND DESIGNS INCORPORATED HEREIN, AS AN INSTRUMENT OF PROFESSIONAL SERVICE, IS THE PROPERTY OF CH2M HILL AND IS NOT TO BE USED, IN WHOLE OR IN PART, FOR ANY OTHER PROJECT WITHOUT THE WRITTEN AUTHORIZATION OF CH2M HILL.

ANITOCH ROAD COMPOSITE WATER TOWER
PUBLIC SERVICES
CITY OF CRESTVIEW
CRESTVIEW, FLORIDA

JACOBS

STRUCTURAL
ANTIOCH WATER TOWER
STRUCTURAL ELEVATION AND SECTION

VERIFY SCALE
BAR IS ONE INCH ON ORIGINAL DRAWING.
0 1"

DATE	MARCH 2021
PROJ	D3282100
DWG	S-02
SHEET	15 of 21

BID DOCUMENTS

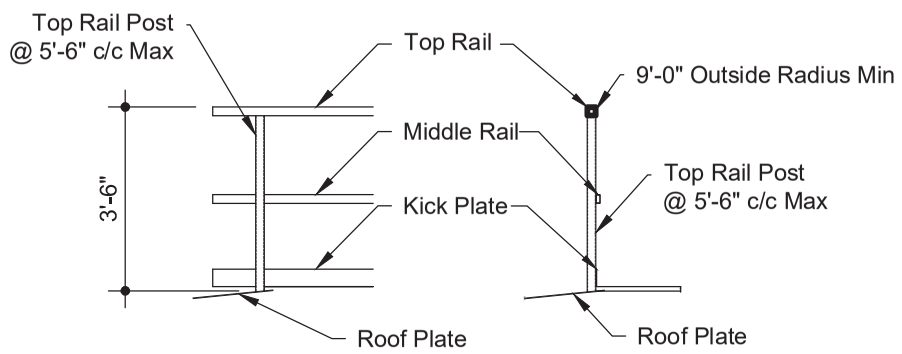

1 ROOF RAIL DETAILS

NOTES:
1. FINAL DESIGN BY TANK MANUFACTURER.
2. MEMBER SIZES SHOWN ARE MINIMUM.
3. DETAIL BASED ON STANDARD DETAIL FROM LANDMARK TANKS (BASIS OF DESIGN)

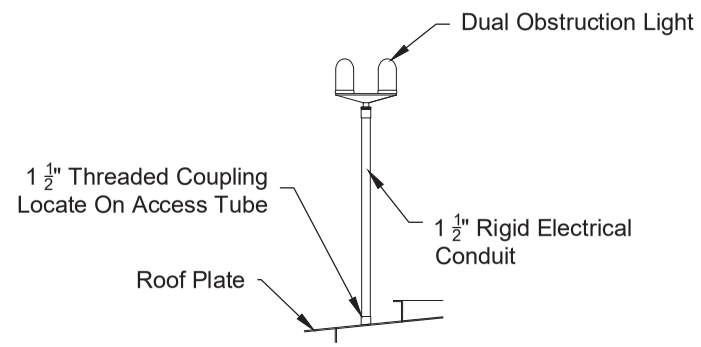

2 OBSTRUCTION LIGHT MOUNT

NOTES:
1. FINAL DESIGN BY TANK MANUFACTURER.

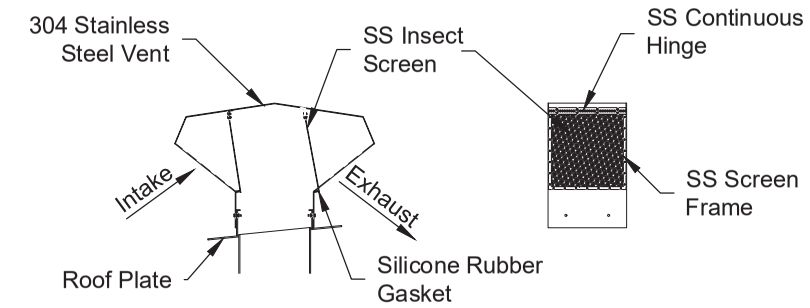

3 ROOF VENT DETAILS

NOTES:
1. FINAL DESIGN BY TANK MANUFACTURER.

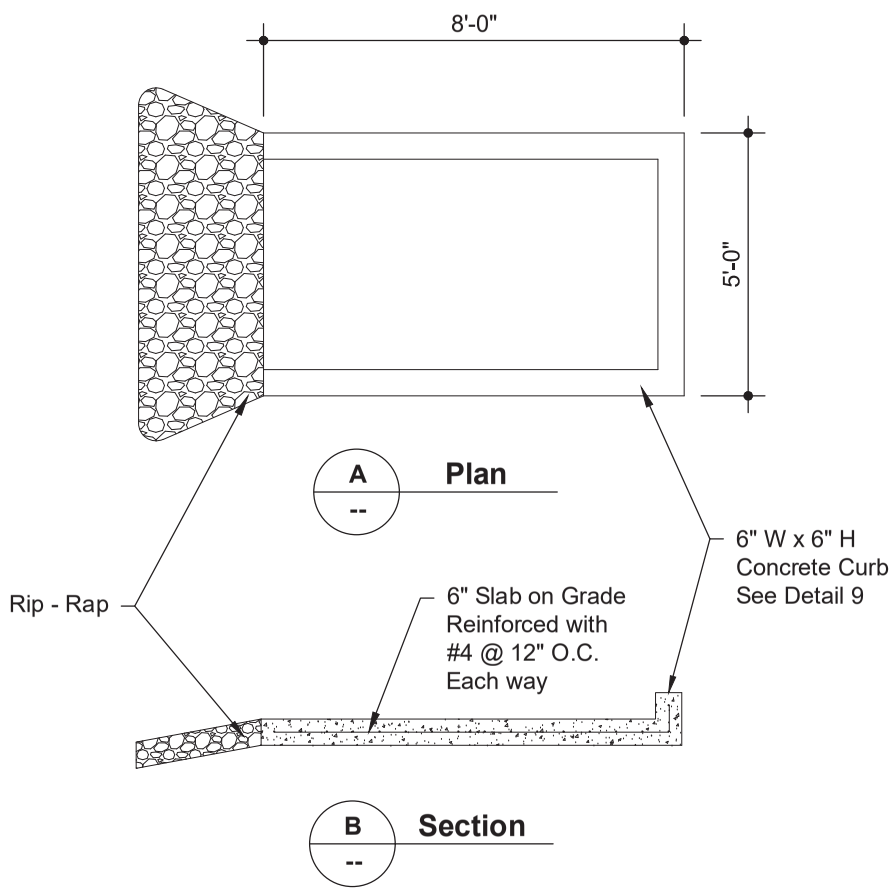

4 SPLASH PAD DETAILS

NOTES:
1. FINAL DESIGN BY TANK MANUFACTURER.

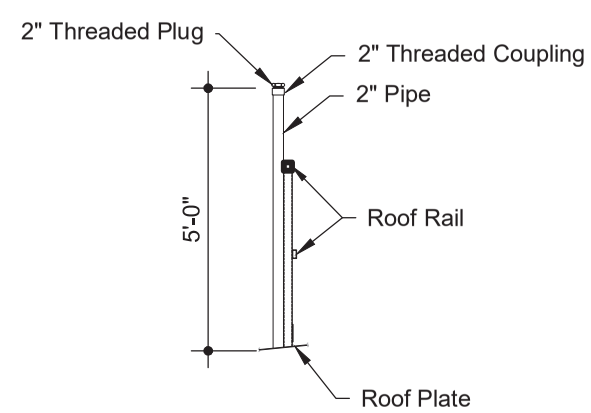

5 ANTENNA MOUNT

NOTES:
1. FINAL DESIGN BY TANK MANUFACTURER.

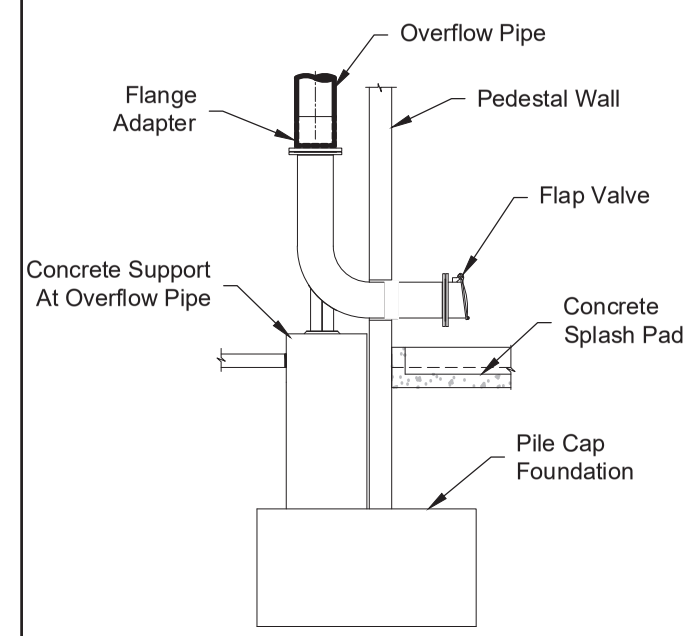

6 OVERFLOW DETAILS

NOTES:
1. FINAL DESIGN BY TANK MANUFACTURER.
2. PIPE OVERFLOW SHALL BE 18" ABOVE GRADE AND SCREENED.

NO.	DATE	DR	REVISION	CHK	BY	APVD
DSGN	S. TATMAN	S. TATMAN		D. EVERSON	J. MAXFIELD	

ANITOCH ROAD COMPOSITE WATER TOWER
PUBLIC SERVICES
CITY OF CRESTVIEW
CRESTVIEW, FLORIDA

JACOBS

STRUCTURAL
ANTIOCH WATER TOWER
DETAILS

VERIFY SCALE
BAR IS ONE INCH ON ORIGINAL DRAWING.
0 1"

DATE	MARCH 2021
PROJ	D3282100
DWG	S-03
SHEET	16 of 21

BID DOCUMENTS

REUSE OF DOCUMENTS: THIS DOCUMENT, AND THE IDEAS AND DESIGNS INCORPORATED HEREIN, AS AN INSTRUMENT OF PROFESSIONAL SERVICE, IS THE PROPERTY OF CH2M HILL AND IS NOT TO BE USED, IN WHOLE OR IN PART, FOR ANY OTHER PROJECT WITHOUT THE WRITTEN AUTHORIZATION OF CH2M HILL.
©CH2M HILL 2018. ALL RIGHTS RESERVED.

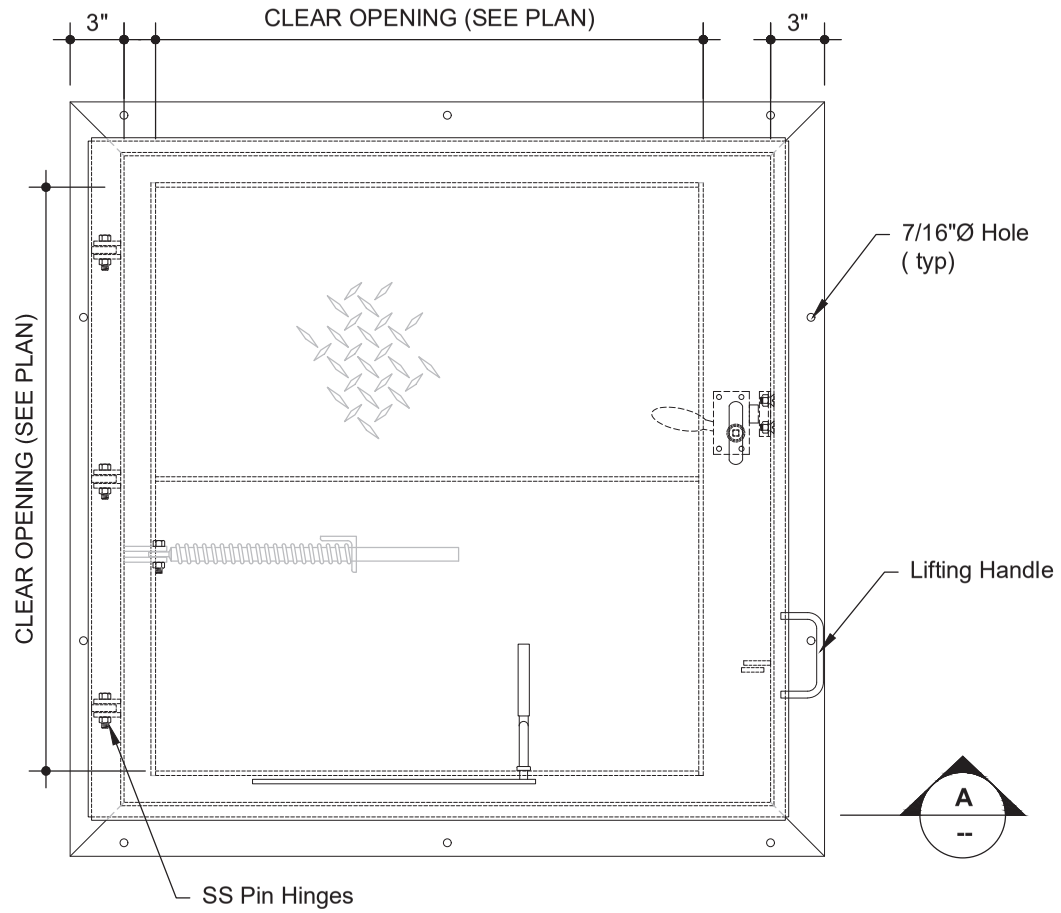

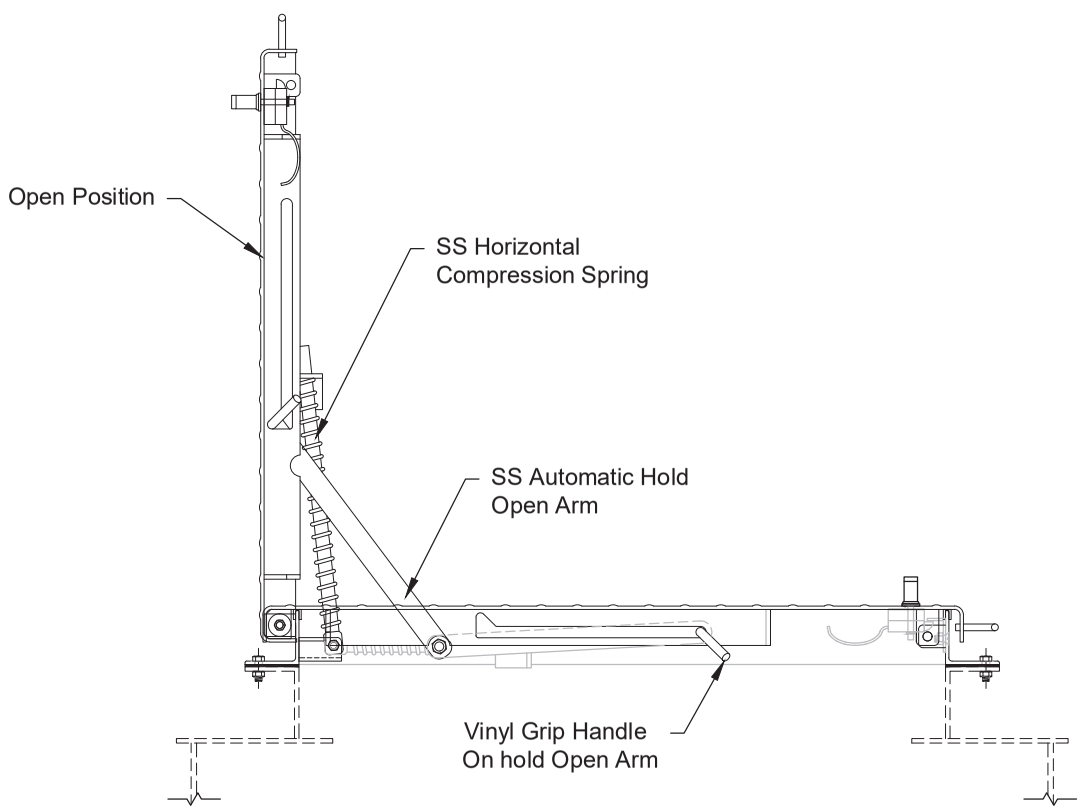

7 HATCH DETAIL

NOTES:
1. FINAL DESIGN BY TANK MANUFACTURER.
2. ALL HATCHES SHALL HAVE CURB AND GASKETS AND BE WEATHERTIGHT.

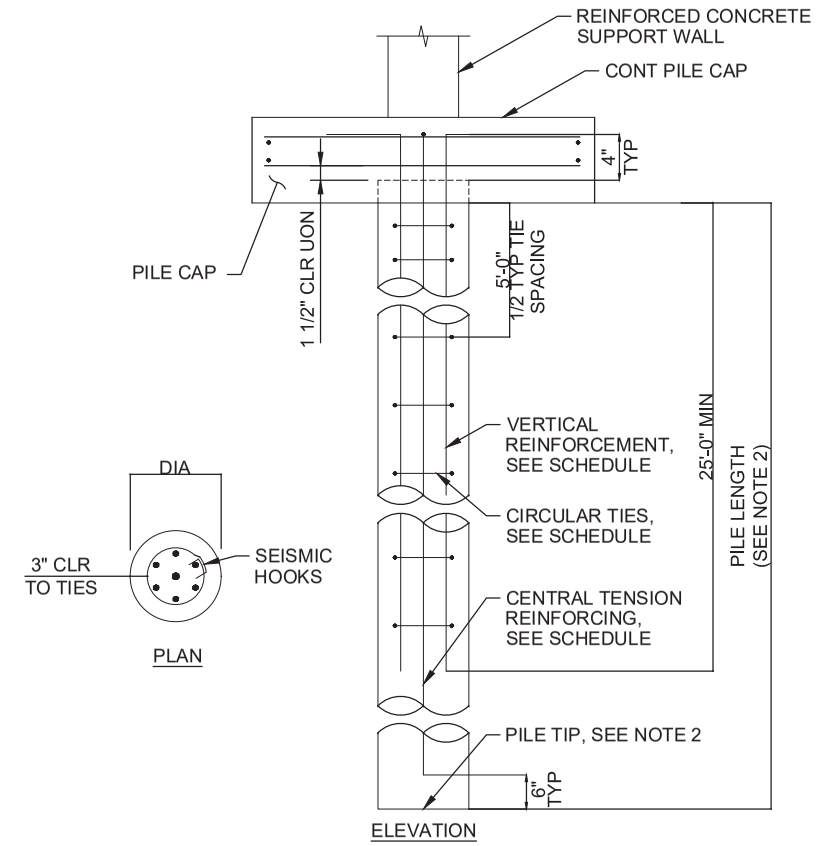

AUGER CAST GROUT PILE SCHEDULE				
PILE DIA	MAX PILE LENGTH	VERT REINF	CIRCULAR TIES	TENSION REINF
NOTE 1	NOTE 2	NOTE 3	NOTE 3	NOTE 3
14"/16"/18"	40'-0"	(6) #7	#4@12"	#11

NOTE:
1. TANK MANUFACTURER SHALL SELECT FINAL DIAMETER.COORDINATE WITH GEOTECHNICAL REPORT WHICH PROVIDES CAPACITIES FOR 14", 16" AND 18" DIA AUGER CAST PILES.
2. GEOTECHNICAL REPORT NOTES A MINIMUM PILE DEPTH OF 40'-0". FINAL DEPTH TO BE DETERMINED BY TANK MANUFACTURER.
3. REINFORCEMENT SHOWN IS MINIMUM, FINAL PILE DESIGN BY TANK MANUFACTURER.
4. SEE DRAWINGS AND SPECIFICATION FOR ADDITIONAL REQUIREMENTS

8 AUGER CAST GROUT PILE DETAIL AND SCHEDULE

NOTES:
1. FINAL DESIGN BY TANK MANUFACTURER.

NO.	DATE	REVISION	BY	APVD
DSGN	S. TATMAN	DR	S. TATMAN	CHK	D. EVERSON	APVD	J. MAXFIELD

ANITOCH ROAD COMPOSITE WATER TOWER
PUBLIC SERVICES
CITY OF CRESTVIEW
CRESTVIEW, FLORIDA

JACOBS

STRUCTURAL
ANTIOCH WATER TOWER
DETAILS

VERIFY SCALE
BAR IS ONE INCH ON ORIGINAL DRAWING.
0 1"

DATE	MARCH 2021
PROJ	D3282100
DWG	S-04
SHEET	17 of 21

BID DOCUMENTS

REUSE OF DOCUMENTS: THIS DOCUMENT, AND THE IDEAS AND DESIGNS INCORPORATED HEREIN, AS AN INSTRUMENT OF PROFESSIONAL SERVICE, IS THE PROPERTY OF CH2M HILL AND IS NOT TO BE USED, IN WHOLE OR IN PART, FOR ANY OTHER PROJECT WITHOUT THE WRITTEN AUTHORIZATION OF CH2M HILL.
©CH2M HILL 2018. ALL RIGHTS RESERVED.

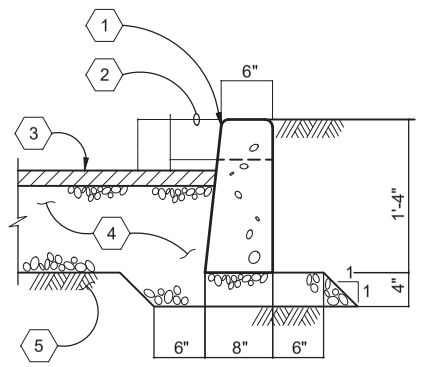

1. 3/4" RADIUS, TYP
2. TOP OF CURB AT APPROACH
3. PAVEMENT SURFACE
4. BASE COURSE
5. PREPARED SUBGRADE

9 CONCRETE CURB

NOTES:
1. FINAL DESIGN BY TANK MANUFACTURER.

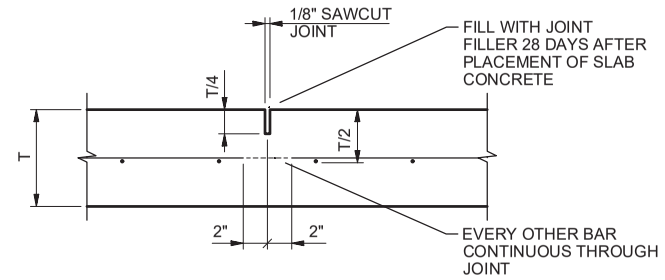

SINGLE REINFORCEMENT MAT

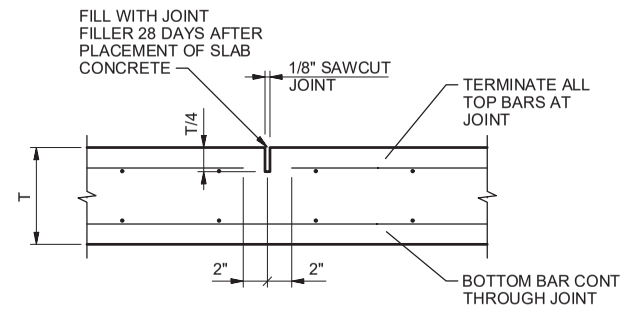

DOUBLE REINFORCEMENT MAT

NOTES:
1. CONTRACTOR SHALL USE STRING LINE OR OTHER POSITIVE MEANS TO PLACE REINFORCEMENT AND LOCATE SAWCUT.

10 BUILDING SLAB ON GRADE SAWN CONTROL JOINT

NOTES:
1. FINAL DESIGN BY TANK MANUFACTURER.

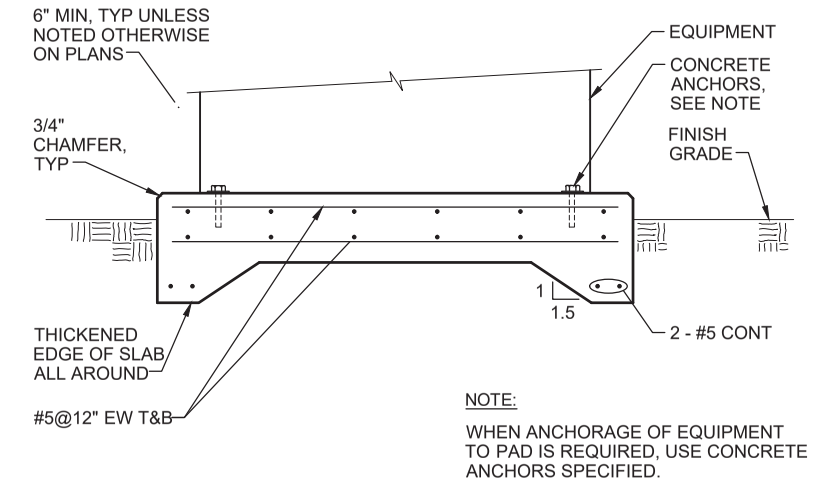

NOTE:

WHEN ANCHORAGE OF EQUIPMENT TO PAD IS REQUIRED, USE CONCRETE ANCHORS SPECIFIED.

TYPE 'H'

11 CONCRETE EQUIPMENT PAD TYPE 'H'

NOTES:
1. FINAL DESIGN BY TANK MANUFACTURER.

NO.	DATE	REVISION	BY	APVD

DSGN	DR	CHK	APVD
S. TATMAN	S. TATMAN	D. EVERSON	J. MAXFIELD

ANITOCH ROAD COMPOSITE WATER TOWER
PUBLIC SERVICES
CITY OF CRESTVIEW
CRESTVIEW, FLORIDA

JACOBS

STRUCTURAL
ANTIOCH WATER TOWER
DETAILS

VERIFY SCALE
BAR IS ONE INCH ON ORIGINAL DRAWING.
0 1"

DATE	MARCH 2021
PROJ	D3282100
DWG	S-05
SHEET	18 of 21

BID DOCUMENTS

REUSE OF DOCUMENTS: THIS DOCUMENT, AND THE IDEAS AND DESIGNS INCORPORATED HEREIN, AS AN INSTRUMENT OF PROFESSIONAL SERVICE, IS THE PROPERTY OF CH2M HILL AND IS NOT TO BE USED, IN WHOLE OR IN PART, FOR ANY OTHER PROJECT WITHOUT THE WRITTEN AUTHORIZATION OF CH2M HILL.
©CH2M HILL 2018. ALL RIGHTS RESERVED.

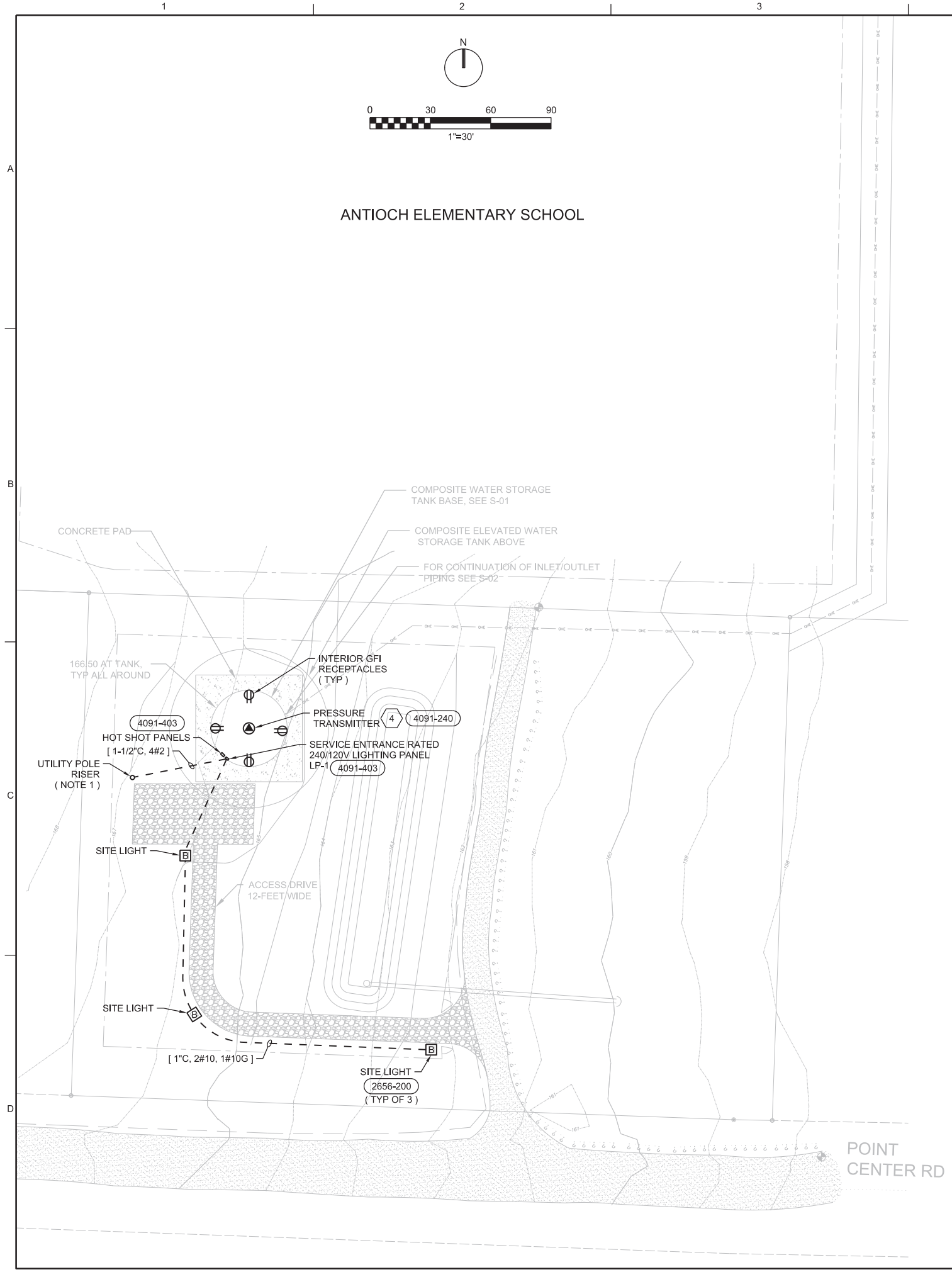

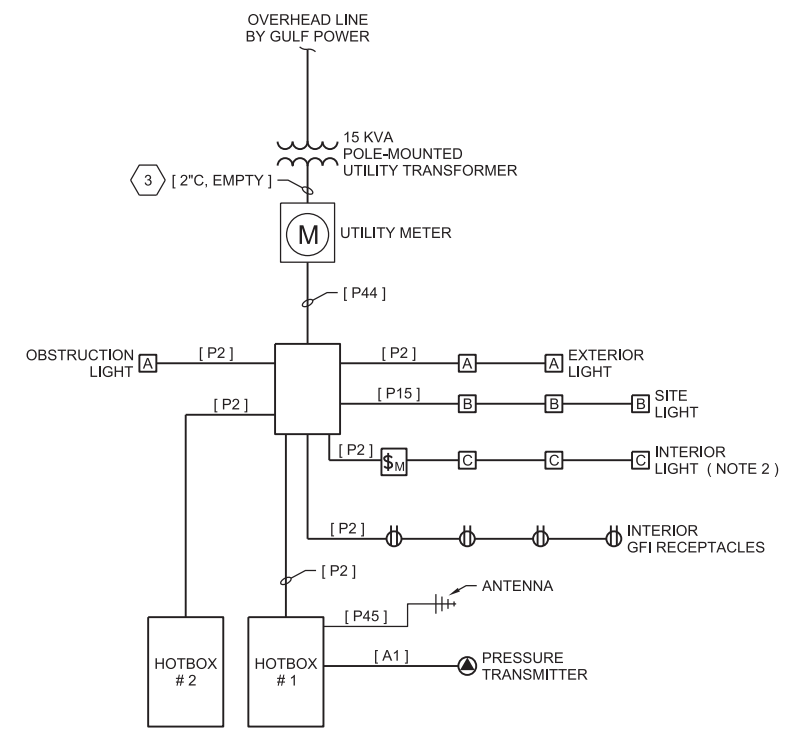

ONE LINE DIAGRAM

GENERAL NOTES

1. GULF POWER SHALL PROVIDE AND INSTALL A NEW OVERHEAD POWER LINE TO POWER THE PANELBOARD LP-1. ALL POLES SHALL BE INCLUDED IN THEIR SCOPE. CONTRACTOR SHALL PROVIDE AND INSTALL [2"C, EMPTY] FROM THE POWER POLE TO THE UTILITY METER.
2. TANK MANUFACTURER SHALL PROVIDE ALL INTERIOR LIGHTS. THE CONDUIT AND CABLE REQUIRED TO POWER THE LIGHTS SHALL BE PROVIDED BY THE CONTRACTOR. THE RISER DIAGRAM DOES NOT INCLUDE ALL OF THE INTERIOR LIGHTS TO BE PROVIDED.
3. CONTRACTOR SHALL PROVIDE AND INSTALL 2-INCH EMPTY CONDUIT FOR THE FEEDER FROM THE UTILITY POLE TO THE UTILITY METER. CONDUCTORS SHALL BE PROVIDE AND INSTALLED BY GULF POWER. THE UTILITY METER SHALL BE MOUNTED ON THE EXTERIOR OF THE NEW WATER STORAGE TANK BY THE CONTRACTOR.
4. LOCATE PRESSURE TRANSMITTER 4 FEET ABOVE FINISHED FLOOR ON INFLUENT PIPE FOR THE STORAGE TANK.

NO.	DATE	REVISION	BY	APVD

DSGN G. YARBERRY | DR G. MESSER | CHK K. HORTON | APVD G. YARBERRY

ANTIOCH ROAD COMPOSITE WATER TOWER
PUBLIC SERVICES
CITY OF CRESTVIEW
CRESTVIEW, FLORIDA

JACOBS

ELECTRICAL
ANTIOCH WATER TOWER
PARTIAL ELECTRICAL SITE PLAN
AND ONE LINE DIAGRAM

VERIFY SCALE
BAR IS ONE INCH ON ORIGINAL DRAWING.
0 1"

DATE	NOVEMBER 2020
PROJ	D3282100
DWG	E-01
SHEET	19 of 21

90% DOCUMENT

REUSE OF DOCUMENTS: THIS DOCUMENT, AND THE IDEAS AND DESIGNS INCORPORATED HEREIN, AS AN INSTRUMENT OF PROFESSIONAL SERVICE, IS THE PROPERTY OF JACOBS AND IS NOT TO BE USED, IN WHOLE OR IN PART, FOR ANY OTHER PROJECT WITHOUT THE WRITTEN AUTHORIZATION OF JACOBS.
© JACOBS 2019. ALL RIGHTS RESERVED.

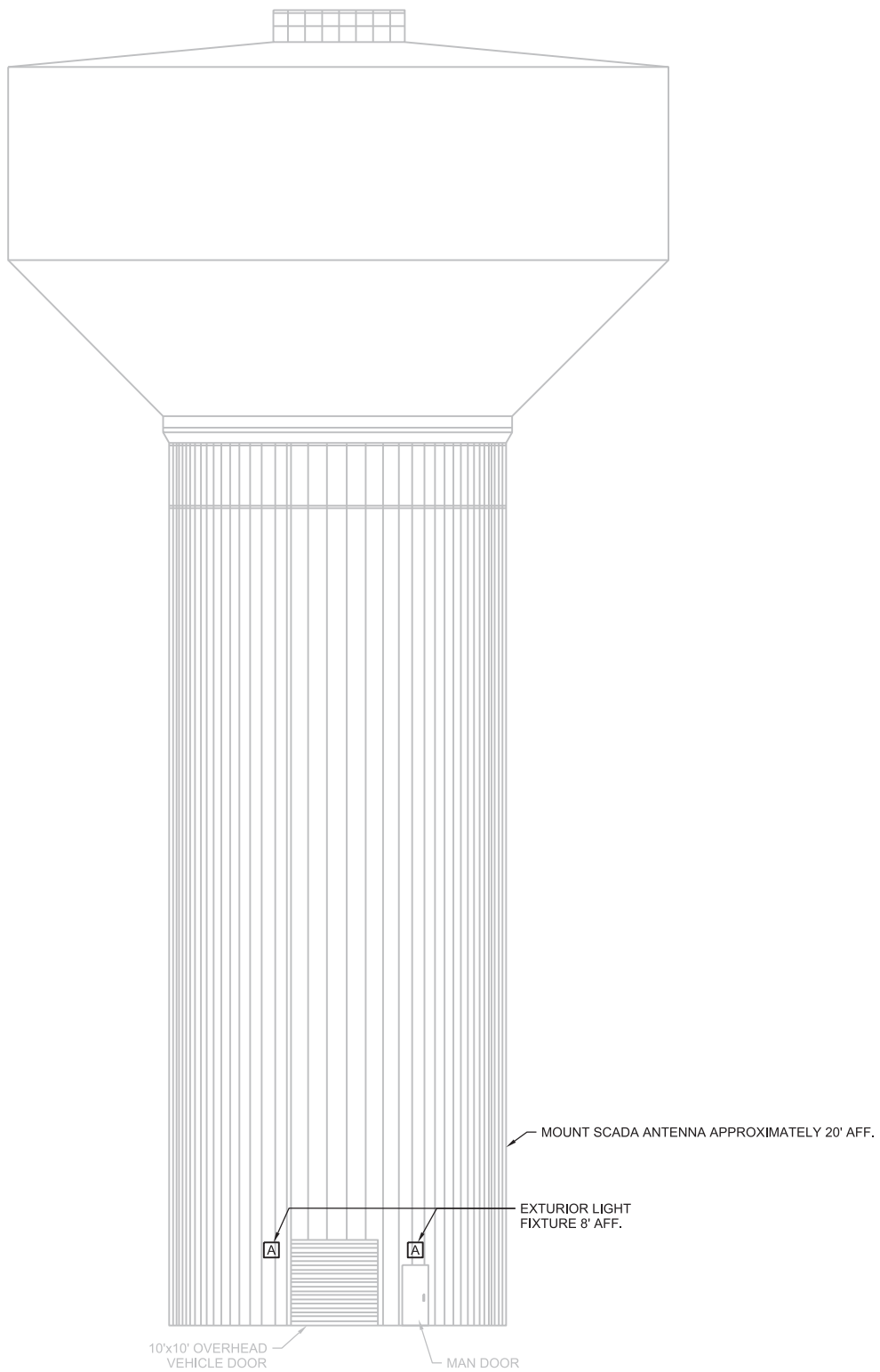

ELEVATION

NTS

PANEL: Panelboard LP-1 | LOCATION: Inside Water Storage Tank Enclosure
SERVICE VOLTAGE: 120/240V | PHASE: 1 | WIRE: 3
TOTAL LOAD KVA: 3.9 | BUS SIZE: 100A | MAIN SIZE: 80A | TYPE: BREAKER
REMARKS: Service Entrance Rated Panelboard Includes Integral SPD | NEUTRAL: FULL | MOUNTING: RACK

LOAD IN KVA A	LOAD IN KVA B	CIRCUIT DESCRIPTION	BKR A/P	CKT NO.	CKT NO.	BKR A/P	CIRCUIT DESCRIPTION	LOAD IN KVA A	LOAD IN KVA B
0.3		Site Lights	20/1	1	2	20/1	Interior Storage Tank Lights	1.0	
	0.6	Exterior Lights	20/1	3	4	20/1	HOT SHOT # 1		0.5
0.8		Interior GFI Receptacles	20/1 *	5	6	20/1	Obstruction Light	0.2	
	0.5	HOT SHOT # 2	20/1	7	8	20/1	SPARE		
		SPARE	20/1	9	10	20/1	SPARE		
		SPARE	20/1	11	12	20/1	SPARE		
		SPARE	20/1 *	13	14	20/1 *	SPARE		
		SPARE	20/1 *	15	16	20/1 *	SPARE		
		BLANK		17	18		BLANK		
		BLANK		19	20		BLANK		
		BLANK		21	22		BLANK		
		BLANK		23	24		BLANK		
		BLANK		25	26		BLANK		
		BLANK		27	28		BLANK		
		BLANK		29	30		BLANK		
1.1	1.1	TOTAL						1.2	0.5

* = ALL BREAKERS WITH A " * " SHALL BE EGFI RATED.

NO.	DATE	REVISION	BY	APVD

DSGN G. YARBERRY | DR G. MESSER | CHK K. HORTON | APVD G. YARBERRY

ANTIOCH ROAD COMPOSITE WATER TOWER
PUBLIC SERVICES
CITY OF CRESTVIEW
CRESTVIEW, FLORIDA

JACOBS

ELECTRICAL
ANTIOCH WATER TOWER
PANEL AND, LUMINAIRE SCHEDULES,
AND WATER TOWER ELEVATION

REUSE OF DOCUMENTS: THIS DOCUMENT, AND THE IDEAS AND DESIGNS INCORPORATED HEREIN, AS AN INSTRUMENT OF PROFESSIONAL SERVICE, IS THE PROPERTY OF JACOBS AND IS NOT TO BE USED, IN WHOLE OR IN PART, FOR ANY OTHER PROJECT WITHOUT THE WRITTEN AUTHORIZATION OF JACOBS.
© JACOBS 2019. ALL RIGHTS RESERVED.

VERIFY SCALE
BAR IS ONE INCH ON ORIGINAL DRAWING.
0 1"

DATE	NOVEMBER 2020
PROJ	D3282100
DWG	E-02
SHEET	20 of 21

90% DOCUMENT

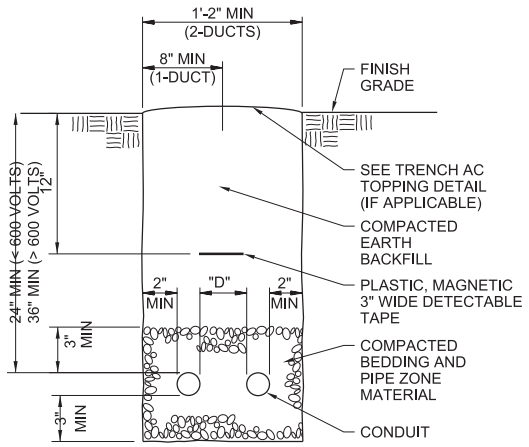

D = 3" MIN FOR 2" AND LARGER CONDUIT

D = 2" MIN FOR 1 1/2" AND SMALLER CONDUIT

TRENCH AND CONDUIT PLACEMENT

NTS

2605-423b

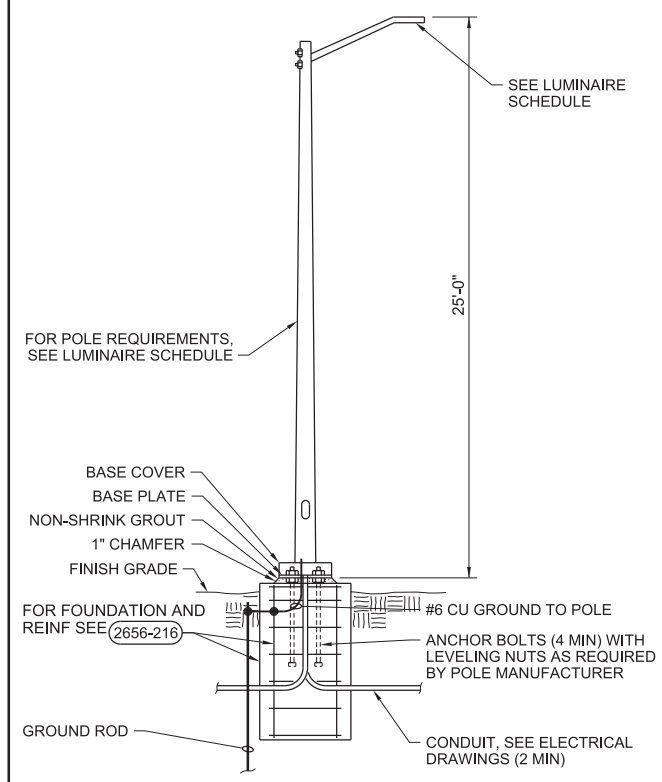

POST LIGHT FOUNDATION

NTS

2656-200

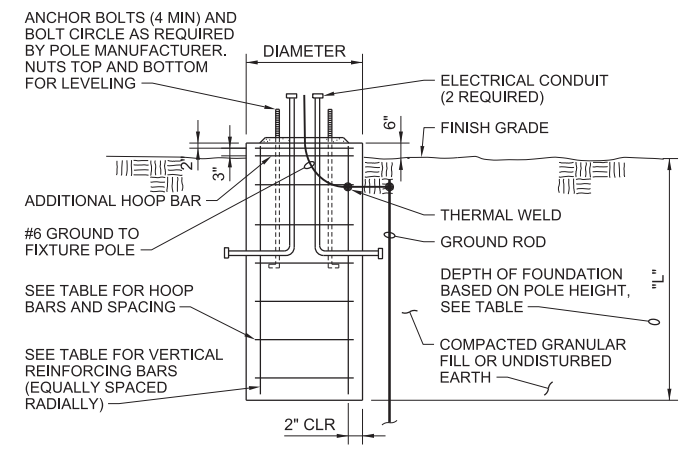

MAX POLE HEIGHT	DIAMETER	"L"	VERTICAL BARS	HOOP BARS
25' - 0"	1' - 6"	5' - 0"	(8) #8	#4 @ 6"

NOTES:

1. USE STAINLESS STEEL NUTS AND LOCKWASHERS.
2. INSTALL TWO CONDUITS (MINIMUM) PER POLE.
3. INSTALL CENTERLINE OF POLE 3'-0" BEHIND THE FACE OF THE CURB.
4. CONDUITS SHALL BE STUBBED UP TO WITHIN SIX INCHES OF THE POLE HANDHOLE.
5. COORDINATE WITH SITE PLANS FOR PROPER ORIENTATION OF POLE.

SITE AREA LIGHT POLE FOOTING

NTS

2656-216

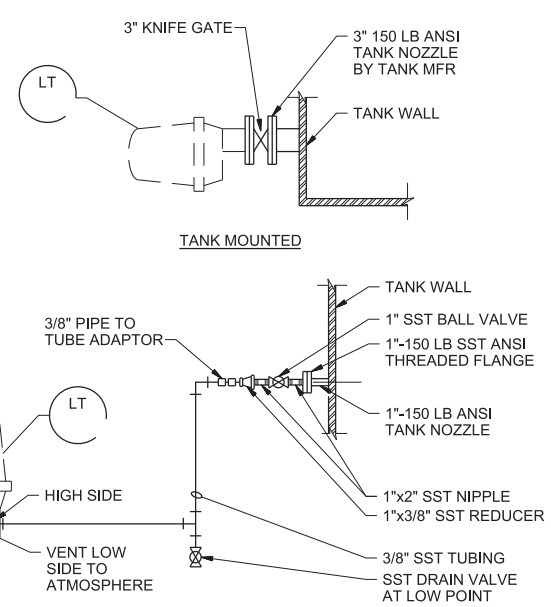

NOTES:

1. MOUNT TRANSMITTER BELOW OR LEVEL WITH BOTTOM LEVEL CONNECTION.

PDT INSTALLATION FOR VENTED TANK LEVEL MEASUREMENT

NTS

4091-240

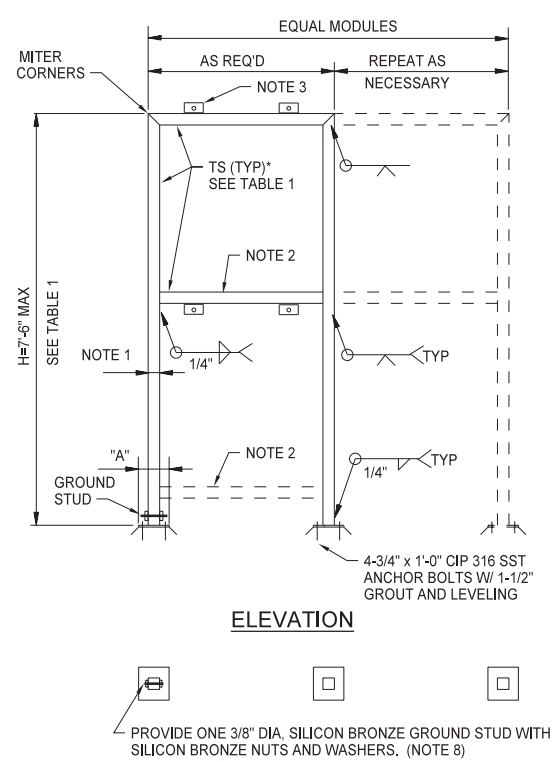

ELEVATION

PLAN

NOTES:

1. TOTAL WEIGHT OF PANEL(S) SHALL NOT EXCEED 750 LB IN EACH MODULE.
2. FOR PANELS WITH "H" GREATER THAN 4'-0", ONE HORIZONTAL MEMBER MUST BE LOCATED WITHIN THE MIDDLE THIRD OF THE FRAME HEIGHT. PROVIDE ADD'L MEMBERS AS NECESSARY FOR PANEL MOUNTING.
3. PROVIDE L 2 1/2"x 2 1/2"x 1/4"x 0'-3" WELD ALL AROUND TO TS: TYP AT EACH PANEL MOUNT.
4. GRIND ALL WELDS AND SHARP CORNERS SMOOTH.
5. THIS DETAIL APPLIES TO NON-FREE STANDING ELECTRICAL EQUIPMENT OVER 25 LB WHICH IS NOT MOUNTED ON A FREE STANDING FRAME OR IS NOT WALL MOUNTED.
6. PANEL OR INSTRUMENT FRONT FACES NORTH, UNLESS OTHERWISE NOTED.

TABLE 1			
HEIGHT "H"	ALUMINUM FRAME		
	TS (MIN SIZE)	BASE PLATE (IN)	
		A	t
5'-0" MAX.	TS 3 x 3 x.188	8	1/2
7'-6" MAX.	TS 4 x 4 x.188	9	5/8

7. FOR OUTDOOR APPLICATIONS, PROVIDE RAINHOOD/ SOLAR SHIELD AS PER DETAIL 4091-384
8. PROVIDE #6 BARE COPPER GROUND WIRE FROM EACH PANEL AND INSTRUMENT MOUNTED ON RACK TO GROUND STUD. CONNECTION TO GROUND GRID SPECIFIED UNDER DIVISION 16.

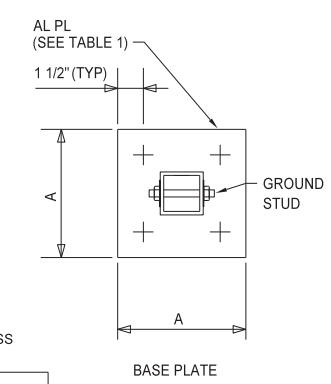

PANEL MOUNTING RACK

NTS

4091-402B

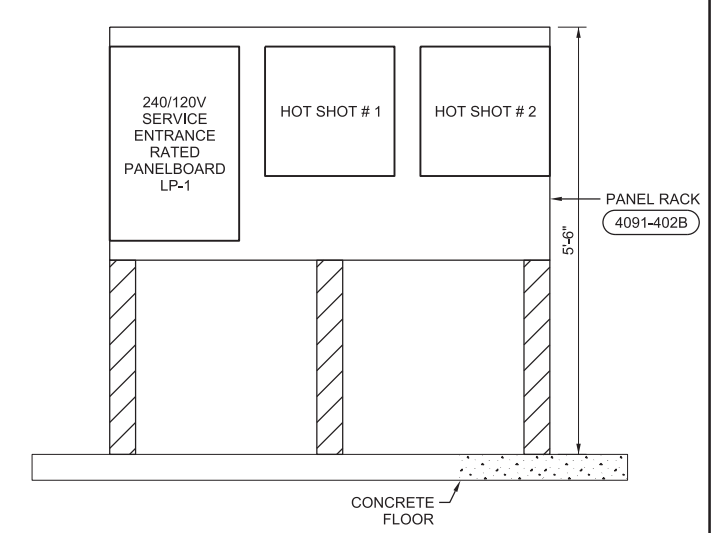

PANELBOARD AND SCADA PANEL RACK

4091-403

NO.	DATE	REVISION	BY	APVD

DSGN G. YARBERRY | DR G. MESSER | CHK K. HORTON | APVD G. YARBERRY

ANTIOCH ROAD COMPOSITE WATER TOWER
PUBLIC SERVICES
CITY OF CRESTVIEW
CRESTVIEW, FLORIDA

JACOBS

ELECTRICAL
ANTIOCH WATER TOWER
STANDARD DETAILS

VERIFY SCALE
BAR IS ONE INCH ON ORIGINAL DRAWING.
0 1"

DATE	NOVEMBER 2020
PROJ	D3282100
DWG	E-03
SHEET	21 of 21

90% DOCUMENT

REUSE OF DOCUMENTS: THIS DOCUMENT, AND THE IDEAS AND DESIGNS INCORPORATED HEREIN, AS AN INSTRUMENT OF PROFESSIONAL SERVICE, IS THE PROPERTY OF JACOBS AND IS NOT TO BE USED, IN WHOLE OR IN PART, FOR ANY OTHER PROJECT WITHOUT THE WRITTEN AUTHORIZATION OF JACOBS.
© JACOBS 2019. ALL RIGHTS RESERVED.

City of Crestview
Antioch Elevated Storage Tank
Bid No. 2021-04-20
Bid Tabulation

Item	Description	CB&I Storage Tank Solutions, LLC	Caldwell Tanks, Inc
1	Mobilization/Demobilization	$ 200,000	$ 140,000
2	General Conditions	$ 50,000	$ 290,000
3	Site clearing, debris removal/disposal	$ 50,000	$ 18,000
4	Elevated tank, including foundations	$ 2,086,000	$ 2,152,500
5	Water transmission main	$ 80,000	$ 117,500
6	Electrical work	$ 150,000	$ 138,000
7	Site work and restoration	$ 30,000	$ 38,000
8	**Total base bid**	**$ 2,646,000**	**$ 2,894,000**
9	Alternate Bid item 1 - Mural	$ 74,726	$ (50,000)
10	Alternate Bid item 2 - Water spheroid style tank	$ (400,000)	$ (169,000)
11	Alternate proposal - extend substantial completion 90 days	$ (170,483)	

Note: Item 11 was not listed on the bid form, however, CB&I submitted a proposal for an additional deduct if the contrat could be extended and painting could be completed during the summer months.

Jacobs hereby certifies this to be a true and correct tabulation of the bids for the above-named project.

4/27/2021

Scott L Jernigan, PE — Date

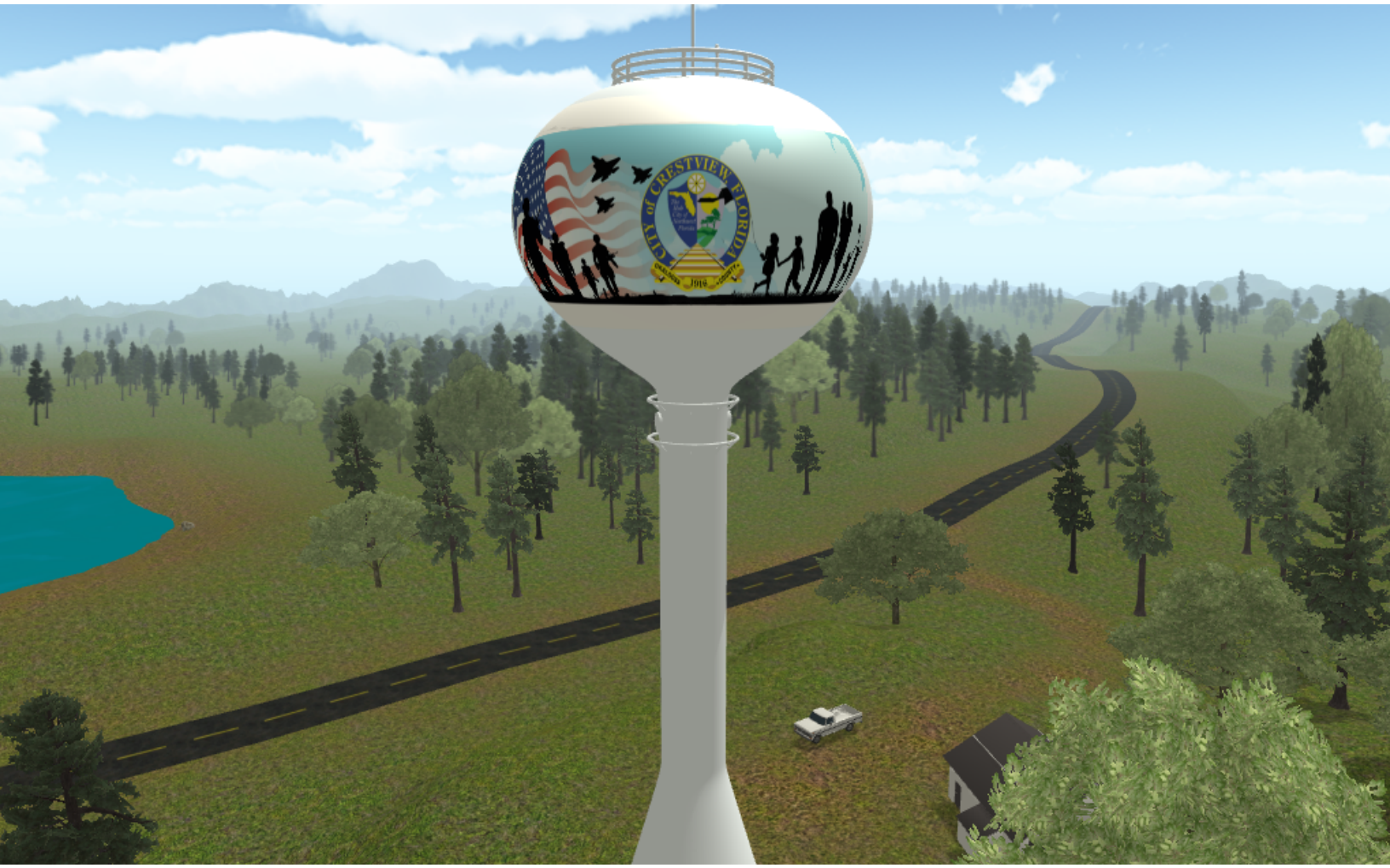
CITY of CRESTVIEW FLORIDA
1919

CITY OF CRESTVIEW

Item # 7.1.

Staff Report

CITY COUNCIL MEETING DATE: May 10, 2021
TYPE OF AGENDA ITEM: 2nd Reading

TO:	Mayor and City Council
CC:	City Manager, City Clerk, Staff and Attorney
FROM:	Tim Bolduc, City Manager
DATE:	4/30/2021
SUBJECT:	Ordinance 1823 - Joey's Law

BACKGROUND:

During the last year city staff has been working to update city ordinances in an effort to remove blight and unsafe structures. After completing several ordinances related to this effort it was discovered an item of concern missing in chapter 54 offenses and miscellaneous provisions. This ordinance has been created to provide for regulations and enforcement for publicly urinating and defecating.

DISCUSSION:

This item provides for help to protect the public health, safety, and welfare, the declared purpose of this section is toprohibit public urination or defecation within the City of Crestview.

Provides for the definition of “Appropriate sanitary facility" means a urinal, toilet, commode, or other facility that accommodates or is designed for the sanitary disposal of human bodily fluids or waste and that is enclosed from public view.

Provides for the definition of "Public place" is any place where the conduct may reasonably be expected to be viewed or could be viewed by others; including but not limited to any walkway,
street, boulevard, highway, thoroughfare, sidewalk, path, bridge, pier, overpass, alley or alleyway, plaza, park, yard, driveway, transportation facility, recreational area, right of way (either opened or unopened), parking lot, public or private building, vacant or undeveloped lot, or the stairwells, alcoves, doorways, and entrance ways to such places.
Prohibits public urination or defecation of any person who urinates or defecates in, on or about any of the following places, other than in an appropriate sanitary facility, is guilty of a class one misdemeanor:

(A) Any public place;

(B) Any place open to the public or exposed to public view;

(C) Any private property into or upon which the public is admitted by easement or license;

(D) Any private property upon which the public is not admitted by easement or license without the consent of the owner, owner’s agent, or the person in lawful possession thereof.

Establishes a violation of this section is a class one misdemeanor and shall be punished by a mandatory minimum fine of two hundred fifty dollars ($250.00).
In addition to the penalties proscribed in section 54.09.04.01 above, the court may require that aperson convicted of this section pay restitution for any clean-up costs incurred by the City.

GOALS & OBJECTIVES

This item is consistent with the goals in A New View Strategic Plan 2020 as follows;

Foundational- these are the areas of focus that make up the necessary foundation of a successful local government.

Organizational Capacity, Effectiveness & Efficiency- To efficiently & effectively provide the highest quality of public services

Communication- To engage, inform and educate public and staff

Quality of Life- these areas focus on the overall experience when provided by the city.

Community Character- Promote desirable growth with a hometown atmosphere

Safety- Ensure the continuous safety of citizens and visitors

Mobility- Provide safe, efficient and accessible means for mobility

Opportunity- Promote an environment that encourages economic and educational opportunity

Play- Expand recreational and entertainment activities within the City

Community Culture- Develop a specific identity for Crestview

FINANCIAL IMPACT

This should have no financial impact on the current City budget.

RECOMMENDED ACTION

Staff respectfully requests adoption on second reading.

Attachments

1. Chapter 54.9

ORDINANCE: 1823

AN ORDINANCE OF THE CITY OF CRESTVIEW, FLORIDA, PROVIDING FOR COMPLIANCE WITH STATE OF FLORIDA STATUTE; PROVIDING FOR THE AMENDMENT OF CHAPTER 54 – OFFENSES AND MISCELLANEOUS PROVISIONS FOR THE ENACTMENT OF JOEY'S LAW; PROVIDING FOR AUTHORITY; PROVIDING FOR SEVERABILITY; PROVIDING FOR SCRIVENER'S ERRORS; PROVIDING FOR LIBERAL INTERPRETATION; PROVIDING FOR REPEAL OF ALL ORDINANCES OR PARTS OF ORDINANCES IN CONFLICT HEREWITH AND PROVIDING FOR AN EFFECTIVE DATE.

WHEREAS, the City is authorized and empowered to adopt and enforce ordinances, not inconsistent with state law, that are necessary to protect the health, welfare, and safety of its citizens and inhabitants

WHEREAS, the City Council ("Council") of the City serves as the elected governing body; directly responsible for the promotion and protection of the public health welfare, and safety of its citizens and inhabitants;

WHEREAS, city staff have reviewed how municipalities of similar size and population address the issue of public urination and defecation and have researched those city's ordinances, defenses, and penalties in the process of crafting this ordinance;

BE IT ORDAINED BY THE CITY COUNCIL OF CRESTVIEW, FLORIDA AS FOLLOWS:

CHAPTER 54 – OFFENSES AND MISCELLANEOUS PROVISIONS is hereby amended with the addition of section 54-9 as attached to this ordinance. (Attachment 1)

SECTION 1. AUTHORITY. The authority for enactment of this ordinance is Chapter 166.021, Florida Statutes, and Section 2 of the City Charter.

SECTION 2. SEVERABILITY. If any word, phrase, sentence, paragraph or provision of this ordinance or the application thereof to any person or circumstance is held invalid or unconstitutional, such finding shall not affect the other provisions or applications of this ordinance which can be given effect without the invalid or unconstitutional provision or application, and to this end the provisions of this ordinance are declared severable.

SECTION 3. SCIVENER'S ERRORS. The correction of typographical errors which do not affect the intent of this Ordinance may be authorized by the City Manager or the City Manager's designee, without public hearing, by filing a corrected or re-codified copy with the City Clerk.

SECTION 4. ORDINANCE TO BE LIBERALLY CONSTRUED. This ordinance shall be liberally construed in order to effectively carry out the purposes hereof which are deemed not to adversely affect public health, safety, or welfare.

SECTION 5. REPEALER. All Ordinances or parts of Ordinances in conflict herewith be and the same are hereby repealed.

SECTION 6. EFFECTIVE DATE. This ordinance shall take effect immediately upon its adoption.

PASSED AND ADOPTED ON SECOND READING BY THE CITY COUNCIL OF CRESTVIEW, FLORIDA ON THE _____ DAY OF _____, 2021

ATTEST:

_____

ELIZABETH M. ROY
City Clerk

APPROVED BY ME THIS _____ DAY OF_____, 2021.

_____

JB Whitten
Mayor

54.09.00 Public Urination or Defecation Prohibited

54.09.01 Purpose

In order to help protect the public health, safety, and welfare, the declared purpose of this section is to prohibit public urination or defecation within the City of Crestview.

54.09.02 Definitions

“Appropriate sanitary facility" means a urinal, toilet, commode, or other facility that accommodates or is designed for the sanitary disposal of human bodily fluids or waste and that is enclosed from public view.

"Public place" is any place where the conduct may reasonably be expected to be viewed or could be viewed by others; including but not limited to any walkway, street, boulevard, highway, thoroughfare, sidewalk, path, bridge, pier, overpass, alley or alleyway, plaza, park, yard, driveway, transportation facility, recreational area, right of way (either opened or unopened), parking lot, public or private building, vacant or undeveloped lot, or the stairwells, alcoves, doorways, and entrance ways to such places.

54.09.03 Public urination or defecation prohibited

54.09.03.01 Any person who urinates or defecates in, on or about any of the following places, other than in an appropriate sanitary facility, is guilty of a class one misdemeanor:

(A) Any public place;

(B) Any place open to the public or exposed to public view;

(C) Any private property into or upon which the public is admitted by easement or license;

(D) Any private property upon which the public is not admitted by easement or license without the consent of the owner, owner’s agent, or the person in lawful possession thereof.

54.09.03.02 It shall be unlawful for any person to urinate or defecate in a place exposed to public view, except by proper use of an appropriate sanitary facility provided for this purpose.

54.09.03.03 It shall be unlawful for any person to dump, unload, or otherwise dispose of any urine or feces, in or on any place described in 54.09.03.01 and 54.09.03.02.

54.09.03.04 Exceptions to 54.09.03.01 and 54.09.03.02 shall be limited to the following:

(A) Animals.

(B) Children under age 11.

(C) Persons with impairments who lack the physical or mental ability to control their bodily functions, except that such a person's parent, guardian, or custodian is responsible for immediately cleaning up any waste expelled by the child or person with impairments. Failure of the parent, guardian, or custodian of the minor child or person with impairments to immediately clean up and properly dispose of solid waster in a sanitary manner will be in violation of this section.

(D) A person may not be found guilty of an offense under this section if the person proves as an affirmative defense that the act of urination / defecation was due to a physician verified medical condition that rendered the act beyond the person's bodily control. Failure of said person to immediately clean up and properly dispose of solid waste in a sanitary manner will be in violation of this section.

54.09.04 Enforcement and Penalty

54.09.04.01 A violation of this section is a class one misdemeanor and shall be punished by a mandatory minimum fine of two hundred fifty dollars ($250.00).

54.09.04.02 In addition to the penalties proscribed in section 54.09.04.01 above, the court may require that a person convicted of this section pay restitution for any clean-up costs incurred by the City.

CITY OF CRESTVIEW

Item # 8.1.

Staff Report

CITY COUNCIL MEETING DATE: May 10, 2021
TYPE OF AGENDA ITEM: 1st reading after PDB

TO:	Mayor and City Council
CC:	City Manager, City Clerk, Staff and Attorney
FROM:	Trae Duley, Planning Administrator
DATE:	5/5/2021
SUBJECT:	Ordinance 1824 - Jones Road Annexation

BACKGROUND:

On April 8, 2021 staff received an application to annex and to amend the comprehensive plan and zoning designations for property located at 331 Jones Road.

The subject property is currently located within unincorporated Okaloosa County with a future land use and zoning designation of Low Density Residential and Residential-1, respectively.

The Planning and Development Board recommended approval of the request on May 3, 2021.

DISCUSSION:

The property description is as follows:

Property Owner:	Moulton, Richard C
Parcel ID:	05-3N-23-0000-0003-0000
Site Size:	115.94 acres
Current FLU:	Okaloosa County Low Density Residential
Current Zoning:	Okaloosa County Residential-1
Current Land Use:	Vacant

The following table provides the surrounding land use designations, zoning districts, and existing uses.

Direction	FLU	Zoning	Existing Use
North	Residential (R)	Single-Family Low-Density District (R-1)	Vacant
East	Public Lands (PL), Okaloosa County Mixed Use, & Mixed Use (MU)	Public Lands (PL), Okaloosa County Mixed Use, & Mixed Use (MU)	Public School, Residential, & Vacant
South	Residential (R)	Single-Family Low-Density District (R-1), Single-Family Medium-Density District (R-2), & Mixed Use (MU)	Residential & Vacant
West	Residential (R) & Okaloosa County Mixed Use	Single and Multi-Family District (R-3) & Okaloosa County Mixed Use	Residential & Vacant

The subject property is currently undeveloped, and a development application has not been submitted. Based on the requested land-use and zoning designations, the property should be developed residentially.

Staff has reviewed the application based on the criteria detailed in Florida statute 171.043 for annexations and finds the following:

- The property is contiguous to the city limits;
- The property is comprised of one (1) lot in unincorporated Okaloosa County, and is therefore considered compact;
- The annexation of the property would not create an enclave
- The subject property is not included in the boundary of another municipality; and,
- The subject property meets the definition of urban purposes.

Courtesy notices were mailed to property owners within 300 feet of the subject property on April 12, 2021. A letter was sent via certified mail to the Okaloosa Board of County Commissioners on April 16, 2021. The property was posted on April 20, 2021. An advertisement ran in the Crestview News Bulletin on April 21, 2021.

GOALS & OBJECTIVES

This item is consistent with the goals in A New View Strategic Plan 2020 as follows.

Foundational – these are the four areas of focus that make up the necessary foundation of a successful local government.

Financial Sustainability – Achieve long term financial sustainability.

Organizational Capacity, Effectiveness & Efficiency – To efficiently & effectively provide the highest quality of public services.

Quality of Life – these six areas focus on the overall experience when provided by the city.

Community Character – Promote desirable growth with a hometown atmosphere.

Opportunity – Promote an environment that encourages economic and educational opportunity.

Community Culture – Develop a specific identity for Crestview.

FINANCIAL IMPACT

The fees for annexation have been waived for this application as it was received during the moratorium on annexation fees.

The cost of advertising will be $656.88.

The successful annexation of this property will have positive future impacts, including ad valorem revenue based on future taxable assessed value, development and building permit fees, and utility usage fees.

RECOMMENDED ACTION

Staff respectfully requests adoption of Ordinance 1824 and move to second reading.

Attachments

1. Exhibit Packet - Jones Rd

ORDINANCE: 1824

AN ORDINANCE ANNEXING TO THE CITY OF CRESTVIEW, FLORIDA, ± 115.94 ACRES OF CONTIGUOUS LANDS LOCATED IN SECTION 5, TOWNSHIP 3 NORTH, RANGE 23 WEST, AND BEING DESCRIBED AS SET FORTH HEREIN; PROVIDING FOR AUTHORITY; PROVIDING FOR LAND DESCRIPTION; PROVIDING FOR BOUNDARY; PROVIDING FOR LAND USE AND ZONING DESIGNATION; PROVIDING FOR AMENDMENT TO THE BASE, LAND USE AND ZONING MAPS; PROVIDING FOR A COMPREHENSIVE PLAN AMENDMENT; PROVIDING FOR FILING WITH THE CLERK OF CIRCUIT COURT OF OKALOOSA COUNTY, THE CHIEF ADMINISTRATIVE OFFICER OF OKALOOSA COUNTY AND THE FLORIDA DEPARTMENT OF STATE; PROVIDING FOR SEVERABILITY; PROVIDING FOR SCRIVENER'S ERRORS; PROVIDING FOR LIBERAL INTERPRETATION; PROVIDING FOR REPEAL OF CONFLICTING CODES AND ORDINANCES; AND PROVIDING FOR AN EFFECTIVE DATE.

BE IT ORDAINED BY THE CITY COUNCIL OF CRESTVIEW, FLORIDA AS FOLLOWS:

SECTION 1 – AUTHORITY. The authority for enactment of this ordinance is Chapter 171, Florida Statutes, and Section 2 of the City Charter.

SECTION 2 – LAND DESCRIPTION. The following described unincorporated area contiguous to the City of Crestview, Florida, is hereby annexed to the City:

PIN # 05-3N-23-0000-0003-0000 (Deed recorded in Book 3342, page 752, dated March 16, 2008)

THE SOUTHWEST QUARTER OF THE NORTHEAST QUARTER AND THE NORTHWEST QUARTER OF THE SOUTHEAST QUARTER, AND THE NORTHEAST QUARTER OF THE SOUTHWEST QUARTER LESS AND EXCEPT, THE FOLLOWING STRIP DESCRIBED AS FOLLOWS:

BEGINNING AT THE INTERSECTION OF THE EXTENSION OF THE EASTERLY RIGHT OF WAY LINE OF JONES ROAD WITH THE SOUTH LINE OF THE NORTHWEST QUARTER OF THE SOUTHEAST QUARTER OF SECTION 5, TOWNSHIP 3 NORTH, RANGE 23 WEST; THENCE NORTH FIFTY FEET; THENCE WEST ALONG A LINE PARALLEL WITH THE SOUTH LINES OF THE NORTHWEST QUARTER OF THE SOUTHEAST QUARTER AND THE NORTHEAST AND NORTHWEST QUARTERS OF THE SOUTHWEST QUARTER TO THE POINT OF INTERSECTION WITH THE WEST LINE OF THE EAST SIXTY FOUR FEET (64.00') OF THE NORTHWEST QUARTER OF THE SOUTHWEST QUARTER; THENCE SOUTH FIFTY FEET (50.00') TO THE SOUTH LINE OF THE NORTHWEST QUARTER OF THE SOUTHWEST QUARTER; THENCE EAST ALONG THE SOUTH LINES OF THE NORTHWEST AND NORTHEAST

QUARTERS OF THE SOUTHWEST QUARTER AND OF THE NORTHWEST QUARTER OF THE SOUTHEAST QUARTER TO THE POINT OF BEGINNING, ALL LYING IN SECTION 5, TOWNSHIP 3 NORTH, RANGE 23 WEST, OKALOOSA COUNTY, FLORIDA.

AND

THE EAST SIXTY FOUR FEET (64.00') OF THE OF THE NORTHWEST QUARTER OF THE OF THE SOUTHWEST QUARTER OF SECTION 5, TOWNSHIP 3 NORTH, RANGE 23 WEST, LOCATED IN OKALOOSA COUNTY FLORIDA.

SECTION 3 – BOUNDARY. The existing boundary line of the City of Crestview, Florida, is modified to include the herein referenced tract of land and the base, zoning and land use maps shall be updated to reflect these changes pursuant to law.

SECTION 4 – LAND USE AND ZONING. Pursuant to general law, the property hereby annexed was subject to Okaloosa County land development, land use plan, and zoning or subdivision regulations, which shall remain in full force and effect until rezoning and land use changes are finalized by the City in compliance with the Comprehensive Plan.

SECTION 5 – COMPREHENSIVE PLAN UPDATE. Pursuant to Chapter 163.011, et seq. petitioner for annexation shall apply through the City for a Comprehensive Plan change which will designate the future land use category for the parcel as Residential (R) with the Single and Multi-Family Dwelling Zoning District (R-3) to be assigned and run concurrent with the approval and adoption of the Comprehensive Plan amendment by the proper authorities.

SECTION 6 – MAP UPDATE. The Base, Zoning and Future Land Use Maps shall be updated at the earliest possible date.

SECTION 7 – FILING. Upon passage, the City Clerk is directed to file a copy of this ordinance with the Clerk of Circuit Court of Okaloosa County and with the Florida Department of the State.

SECTION 8 – SEVERABILITY. If any word, phrase, sentence, paragraph or provision of this ordinance or the application thereof to any person or circumstance is held invalid or unconstitutional, such finding shall not affect the other provisions or applications of this ordinance which can be given effect without the invalid or unconstitutional provision or application, and to this end the provisions of this ordinance are declared severable.

SECTION 9 – SCRIVENER'S ERRORS. The correction of typographical errors which do not affect the intent of this Ordinance may be authorized by the City Manager or the City Manager's designee, without public hearing, by filing a corrected or re-codified copy with the City Clerk.

SECTION 10 – ORDINANCE TO BE LIBERALLY CONSTRUED. This Ordinance shall be liberally construed in order to effectively carry out the purposes hereof which are deemed not to adversely affect public health, safety, or welfare.

SECTION 11 – REPEAL OF CONFLICTING CODES, ORDINANCES, AND RESOLUTIONS. All Charter provisions, codes, ordinances and resolutions or parts of charter provisions, codes, ordinances and resolutions or portions thereof of the City of Crestview, in conflict with the provisions of this Ordinance are

hereby repealed to the extent of such conflict.

SECTION 12 – EFFECTIVE DATE. This ordinance shall take effect immediately upon its adoption.

PASSED AND ADOPTED ON SECOND READING BY THE CITY COUNCIL OF CRESTVIEW, FLORIDA ON THE _____ DAY OF _____, 2021.

ATTEST:

_____
ELIZABETH M. ROY
City Clerk

APPROVED BY ME THIS _____DAY OF _____, 2021.

_____
J. B. WHITTEN
Mayor

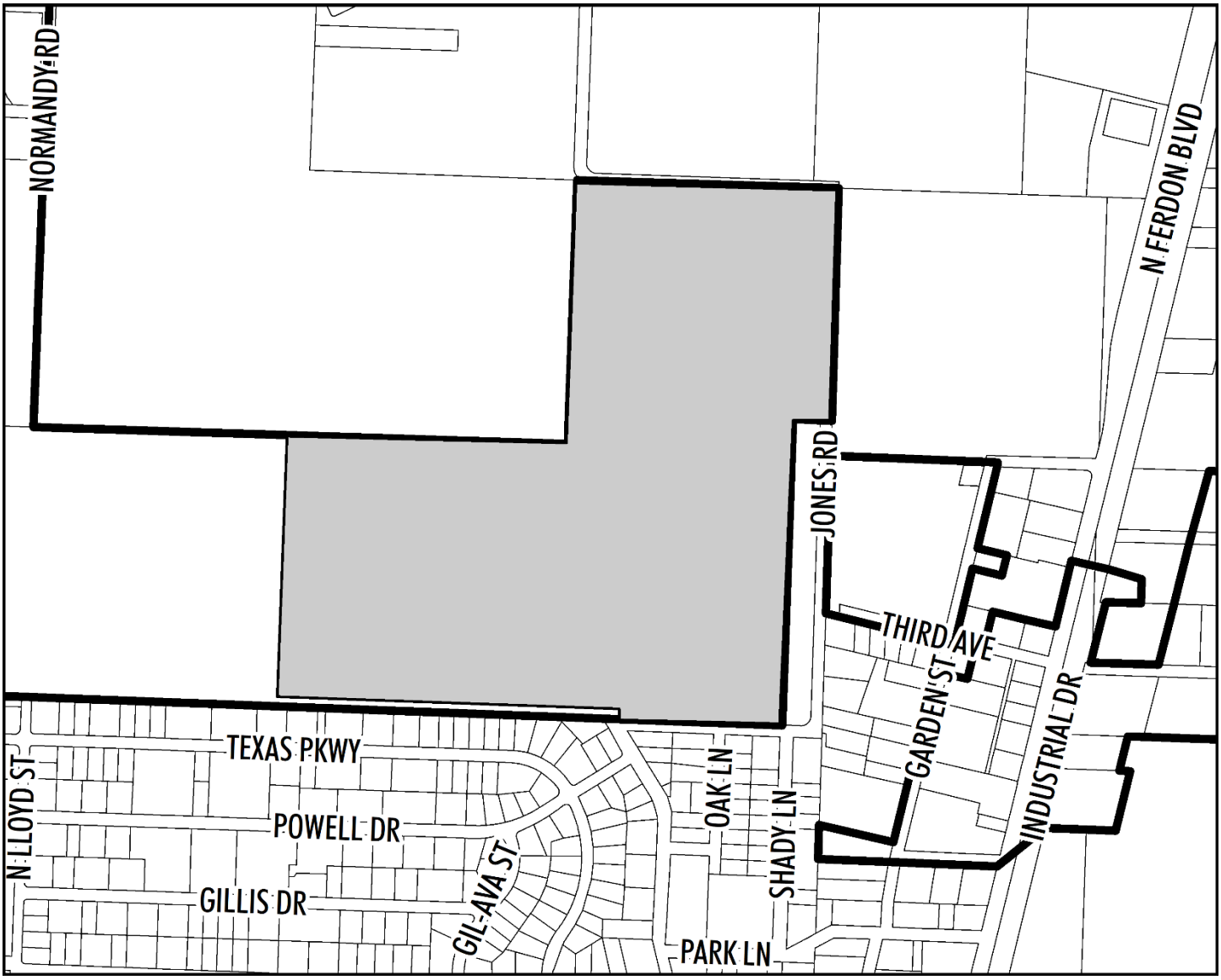
NORMANDY RD
N LLOYD ST
TEXAS PKWY
POWELL DR
GILLIS DR
GIL-AVA ST
OAK LN
PARK LN
SHADY LN
JONES RD
THIRD AVE
GARDEN ST
INDUSTRIAL DR
N FERDON BLVD

Vicinity Map

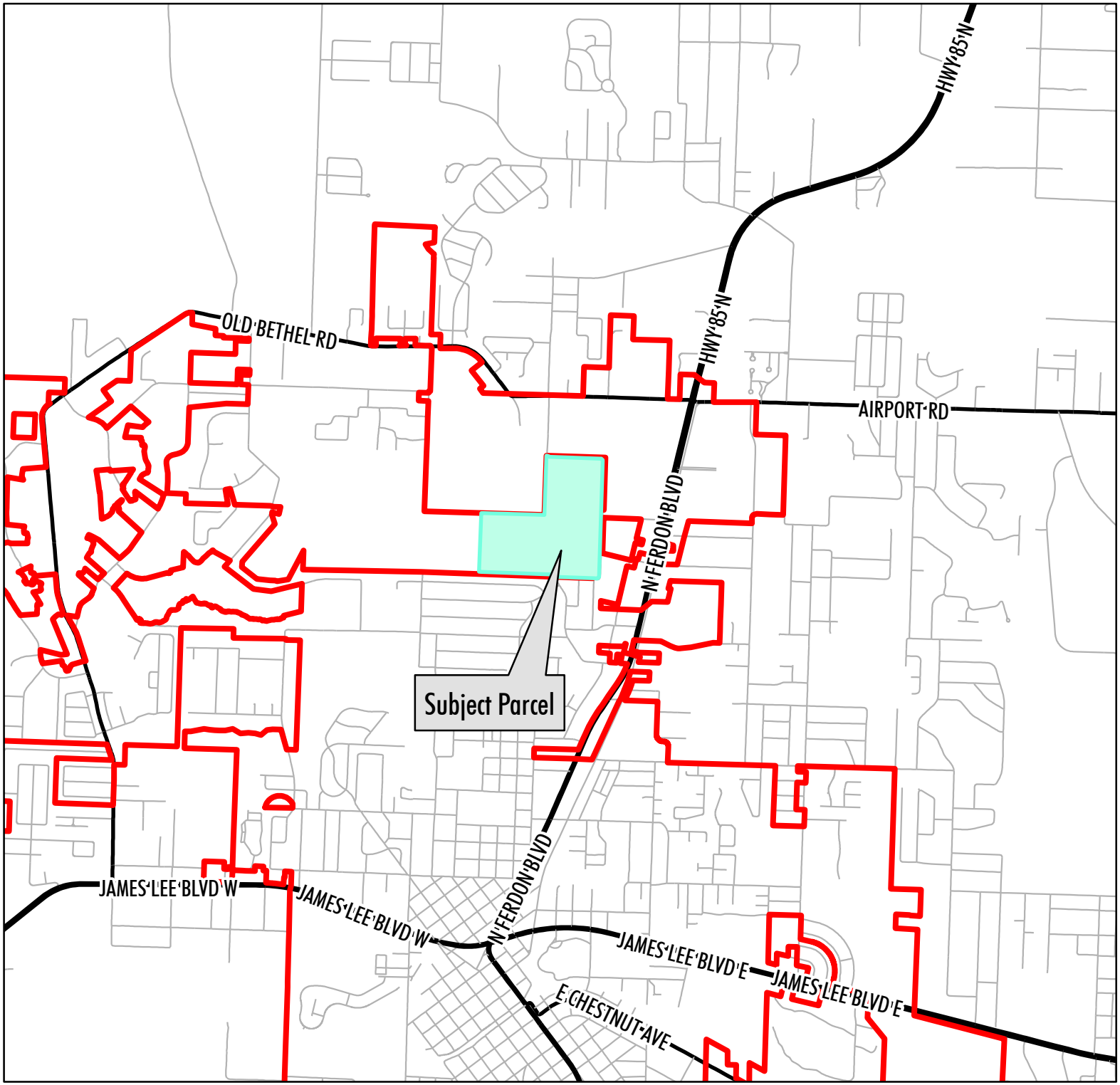

N

Not to Scale

PREPARED BY CITY OF CRESTVIEW
COMMUNITY DEVELOPMENT SERVICES
PARCEL INFORMATION PROVIDED BY
OKALOOSA COUNTY GIS DEPARTMENT
NAD 1983 STATE PLANE, NORTH ZONE
U.S. SURVEY FEET

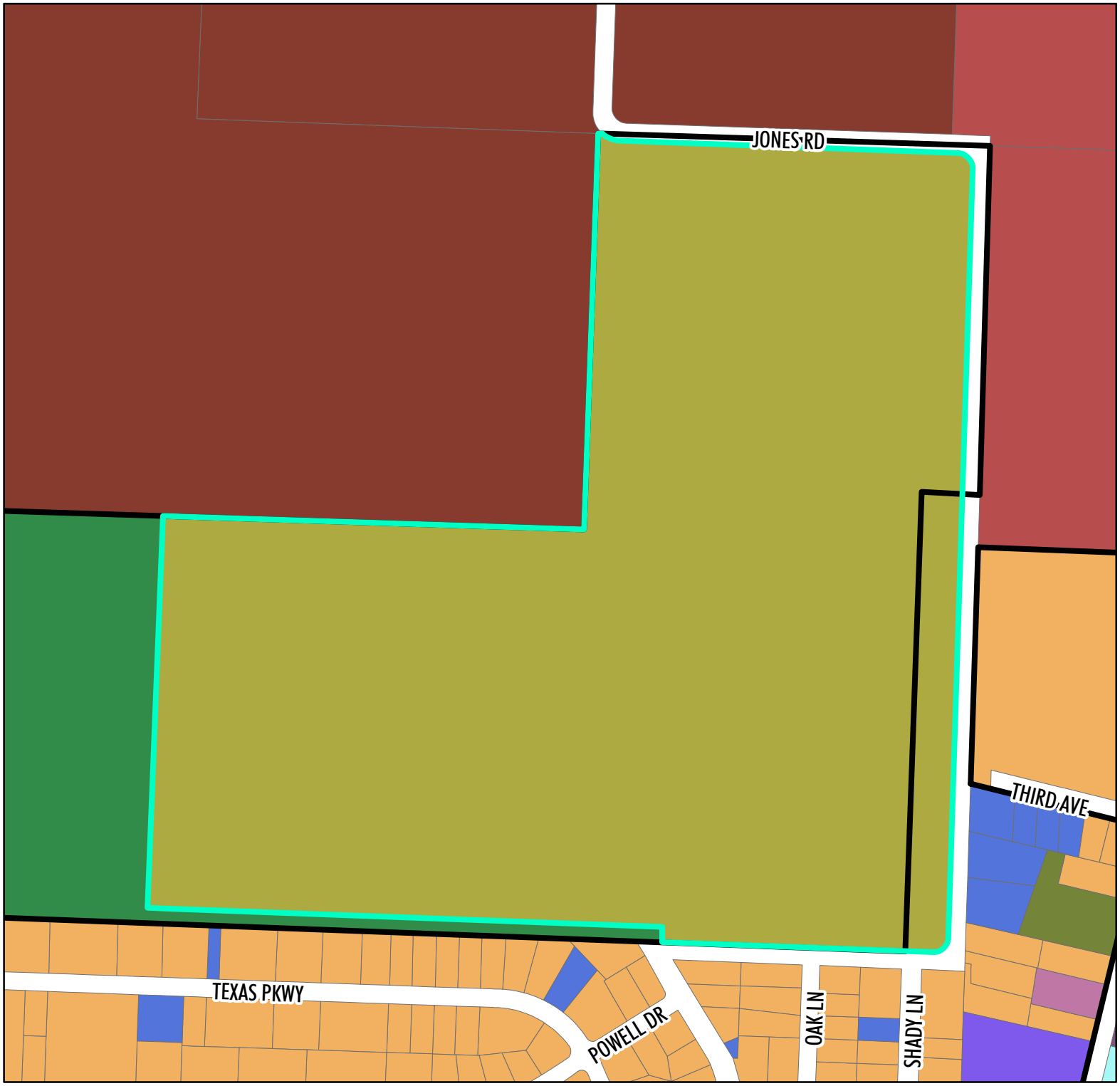

Existing Use

N

0 225 450

Feet

Legend

- Subject Parcel
- City Limits

Existing Use

- Improved A
- No AG Acre
- Office
- Public School
- Single Family
- Timberland
- Vacant
- Vehicle Sale
- Warehouse

PREPARED BY CITY OF CRESTVIEW
COMMUNITY DEVELOPMENT SERVICES
PARCEL INFORMATION PROVIDED BY
OKALOOSA COUNTY GIS DEPARTMENT
NAD 1983 STATE PLANE, NORTH ZONE
U.S. SURVEY FEET

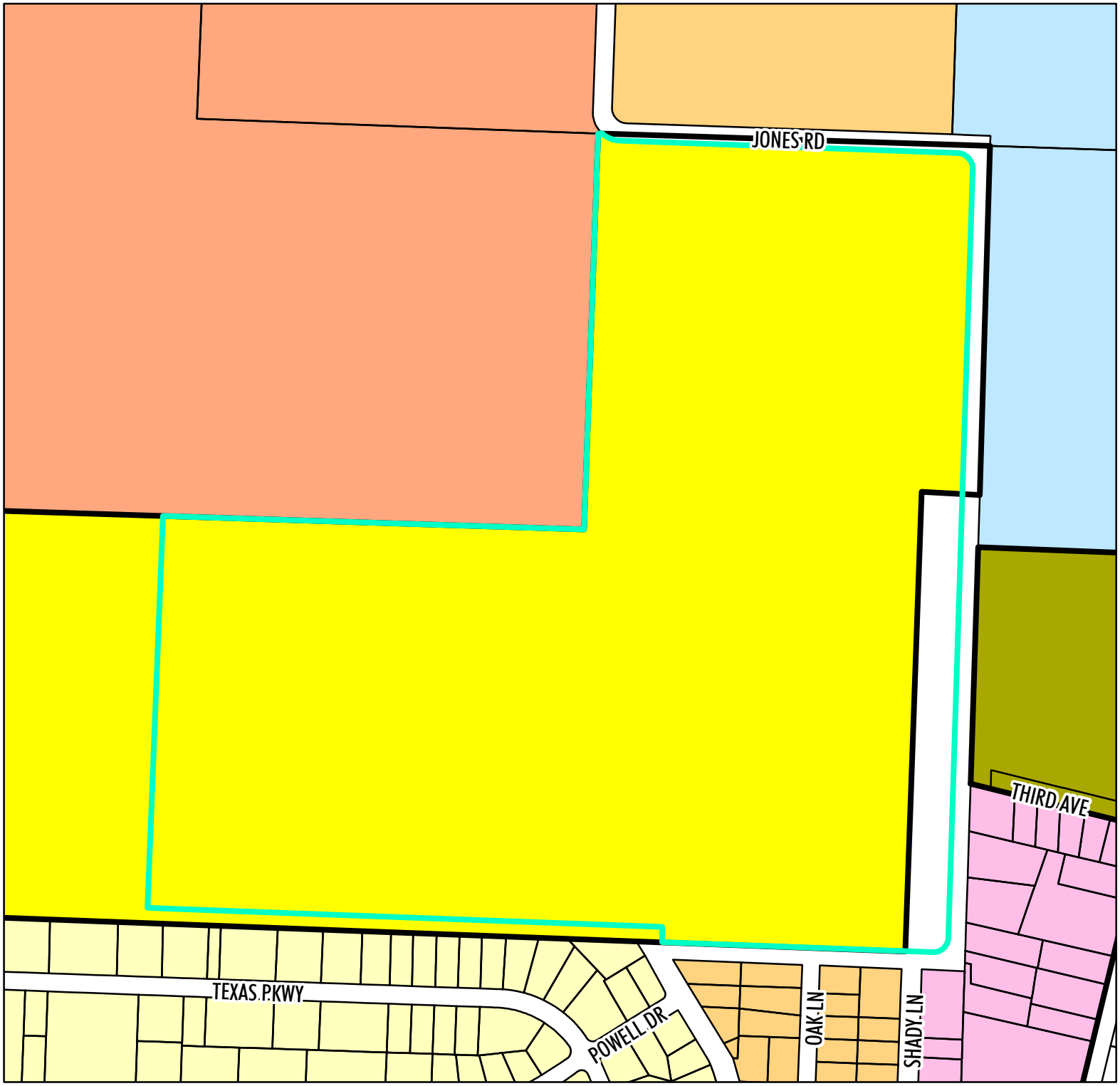

Current Zoning

N

0 225 450

Feet

Legend

- Subject Parcel
- City Limits

City Zoning

- Single Family Low Density District (R-1)
- Single Family Medium Density District (R-2)
- Single and Multi-Family Dwelling District (R-3)
- Mixed Use (MU)
- Commercial (C-1)
- Commercial (C-2)
- Industrial (IN)
- Public Lands (P)
- Conservation (E)

County Zoning

- Residential - 1 (R-1)
- Mixed Use (MU)

PREPARED BY CITY OF CRESTVIEW
COMMUNITY DEVELOPMENT SERVICES
PARCEL INFORMATION PROVIDED BY
OKALOOSA COUNTY GIS DEPARTMENT
NAD 1983 STATE PLANE, NORTH ZONE
U.S. SURVEY FEET

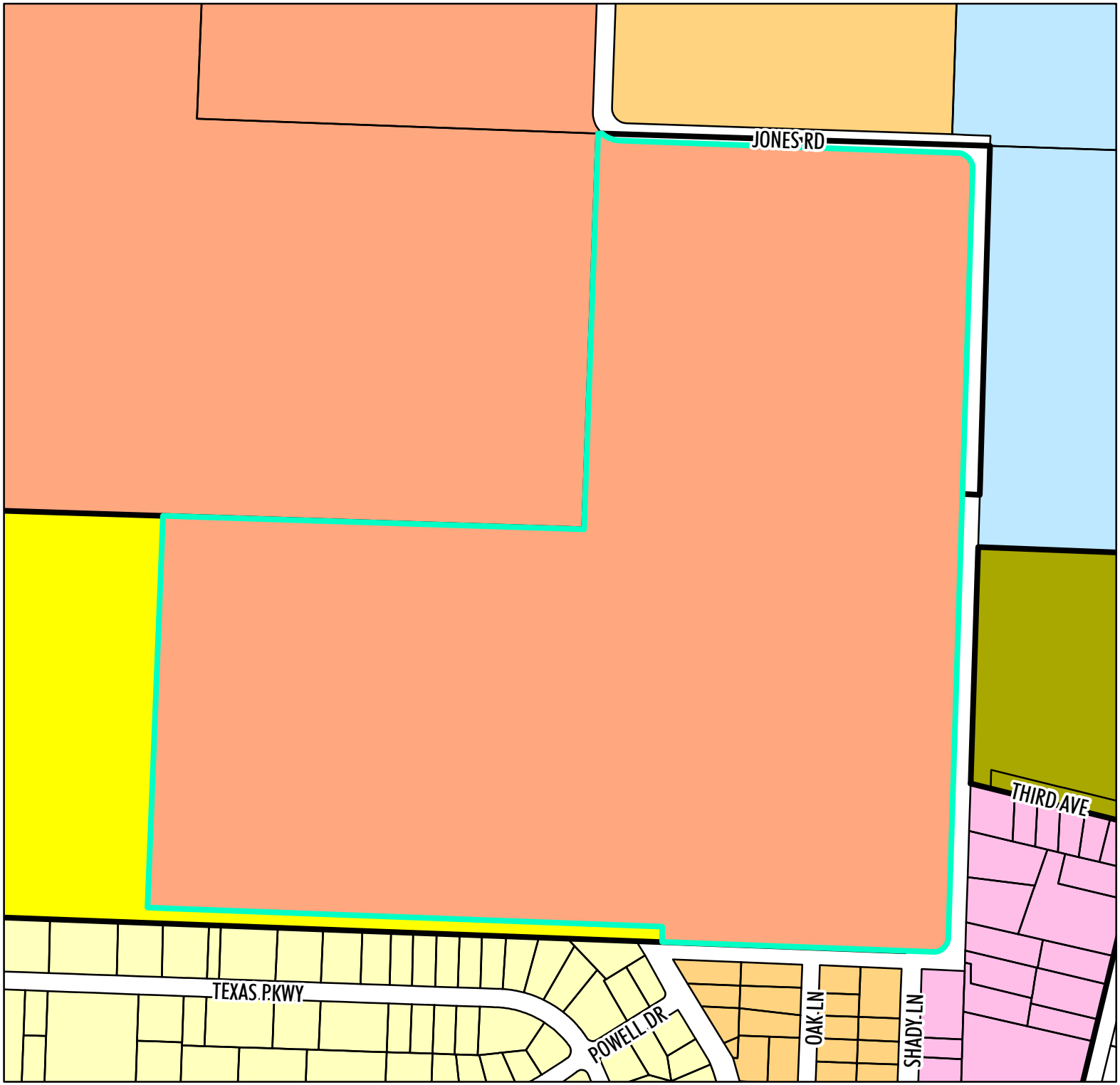

Proposed Zoning

N

0 225 450

Feet

Legend

- Subject Parcel
- City Limits

City Zoning

- Single Family Low Density District (R-1)
- Single Family Medium Density District (R-2)
- Single and Multi-Family Dwelling District (R-3)
- Mixed Use (MU)
- Commercial (C-1)
- Commercial (C-2)
- Industrial (IN)
- Public Lands (P)
- Conservation (E)

County Zoning

- Residential - 1 (R-1)
- Mixed Use (MU)

PREPARED BY CITY OF CRESTVIEW
COMMUNITY DEVELOPMENT SERVICES
PARCEL INFORMATION PROVIDED BY
OKALOOSA COUNTY GIS DEPARTMENT
NAD 1983 STATE PLANE, NORTH ZONE
U.S. SURVEY FEET

Current Future Land Use

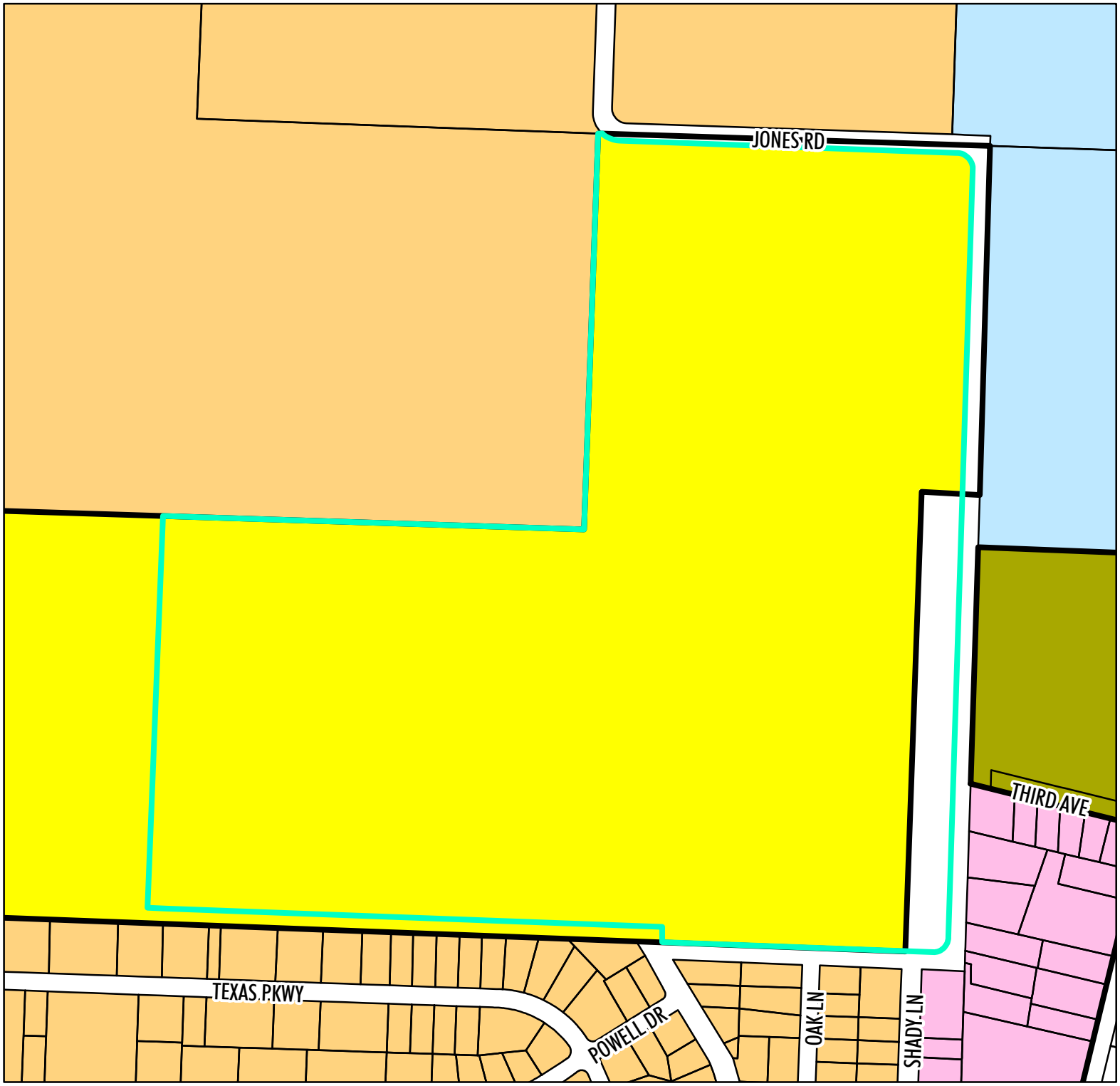

N

0 225 450

Feet

Legend

- Subject Parcel
- City Limits

City Future Land Use

- Commercial (C)
- Industrial (IN)
- Mixed Use (MU)
- Conservation (CON)
- Public Lands (PL)
- Residential (R)

County Future Land Use

- Low Density Residential (LDR)
- Mixed Use (MU)

PREPARED BY CITY OF CRESTVIEW
COMMUNITY DEVELOPMENT SERVICES
PARCEL INFORMATION PROVIDED BY
OKALOOSA COUNTY GIS DEPARTMENT
NAD 1983 STATE PLANE, NORTH ZONE
U.S. SURVEY FEET

Proposed Future Land Use

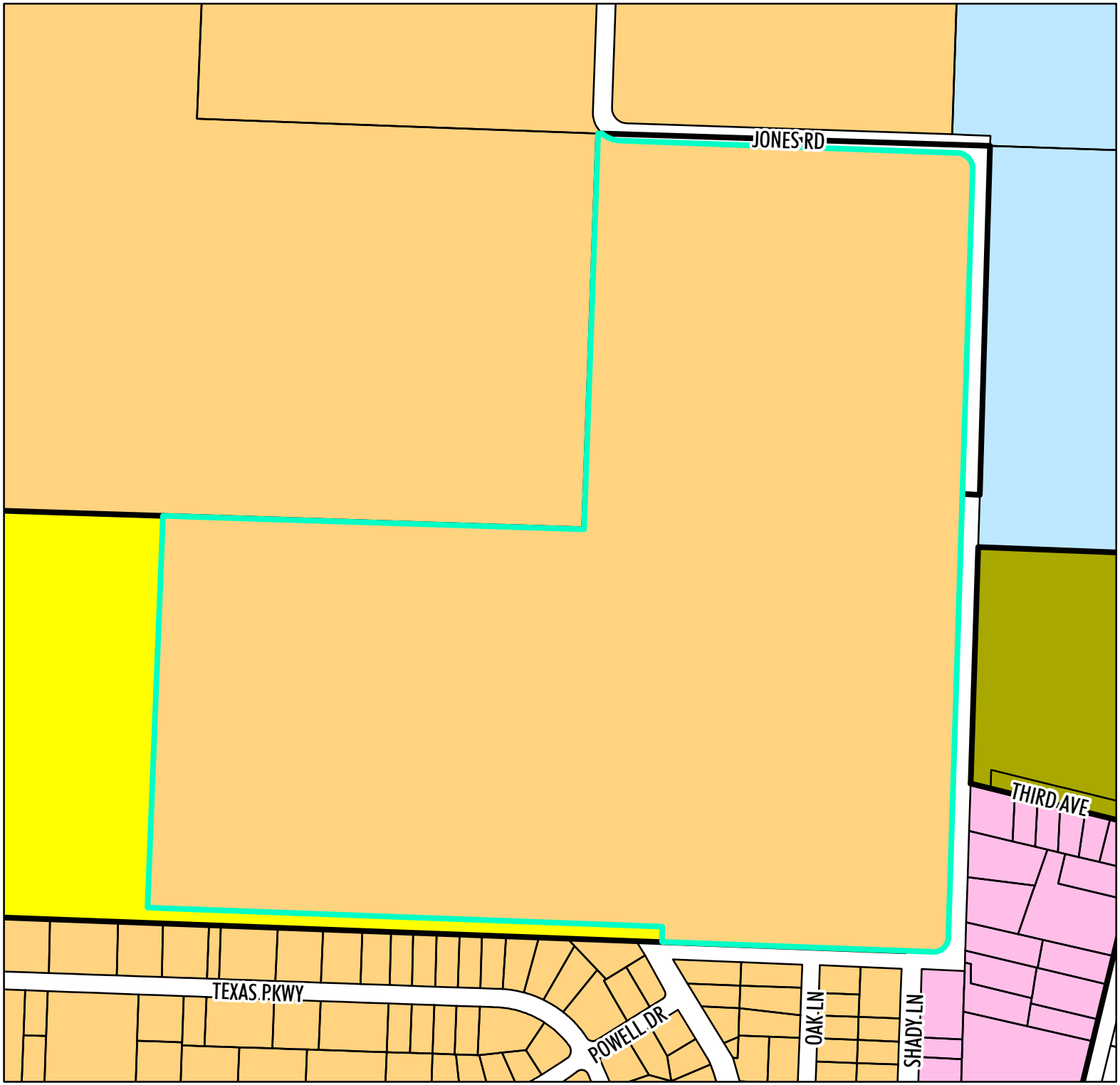

N

0 225 450

Feet

Legend

- Subject Parcel
- City Limits

City Future Land Use

- Commercial (C)
- Industrial (IN)
- Mixed Use (MU)
- Conservation (CON)
- Public Lands (PL)
- Residential (R)

County Future Land Use

- Low Density Residential (LDR)
- Mixed Use (MU)

PREPARED BY CITY OF CRESTVIEW
COMMUNITY DEVELOPMENT SERVICES
PARCEL INFORMATION PROVIDED BY
OKALOOSA COUNTY GIS DEPARTMENT
NAD 1983 STATE PLANE, NORTH ZONE
U.S. SURVEY FEET

CITY OF CRESTVIEW

Item # 8.2.

Staff Report

CITY COUNCIL MEETING DATE: May 10, 2021
TYPE OF AGENDA ITEM: 1st reading after PDB

TO:	Mayor and City Council
CC:	City Manager, City Clerk, Staff and Attorney
FROM:	Trae Duley, Planning Administrator
DATE:	5/6/2021
SUBJECT:	Ordinance 1825 - Jones Road Comprehensive Plan Amendment

BACKGROUND:

On April 8, 2021 staff received an application to annex and to amend the comprehensive plan and zoning designations for property located at 331 Jones Road.

The subject property is currently located within unincorporated Okaloosa County with a future land use and zoning designation of Low Density Residential and Residential-1, respectively.

The application requests the Residential (R) future land use designation for the property.

The Planning and Development Board recommended approval of the request on May 3, 2021.

DISCUSSION:

The property description is as follows:

Property Owner:	Moulton, Richard C
Parcel ID:	05-3N-23-0000-0003-0000
Site Size:	115.94 acres
Current FLU:	Okaloosa County Low Density Residential
Current Zoning:	Okaloosa County Residential-1
Current Land Use:	Vacant

The following table provides the surrounding land use designations, zoning districts, and existing uses.

Direction	FLU	Zoning	Existing Use
North	Residential (R)	Single-Family Low-Density District (R-1)	Vacant
East	Public Lands (PL), Okaloosa County Mixed Use, & Mixed Use (MU)	Public Lands (PL), Okaloosa County Mixed Use, & Mixed Use (MU)	Public School, Residential, & Vacant
South	Residential (R)	Single-Family Low-Density District (R-1), Single-Family Medium-Density District (R-2), & Mixed Use (MU)	Residential & Vacant
West	Residential (R) & Okaloosa	Single and Multi-Family District	Residential & Vacant

County Mixed Use (R-3) & Okaloosa County Mixed Use

The subject property is currently undeveloped, and a development application has not been submitted. Based on the requested land-use and zoning designations, the property should be developed residentially.

Staff reviewed the request for a comprehensive plan amendment and finds the following:

- The proposed future land use map designation is compatible with the surrounding area.
- The proposed future land use map designation is consistent with the city's comprehensive plan and land development code.
- The process for adoption of the future land use map amendment follows all requirements of Florida statute sections 163.3184 (3) and (5).
- The proposed amendment involves less than 10 acres.
- The proposed amendment does not involve a text change to goals, policies, and objectives of the comprehensive plan. It only proposes a land use change to the future land use map for a site-specific small-scale development.
- The subject property is not located within an area of critical state concern.

Courtesy notices were mailed to property owners within 300 feet of the subject property on April 12, 2021. The property was posted on April 20, 2021. An advertisement ran in the Crestview News Bulletin on April 21, 2021.

GOALS & OBJECTIVES

This item is consistent with the goals in A New View Strategic Plan 2020 as follows.

Foundational – these are the four areas of focus that make up the necessary foundation of a successful local government.

Financial Sustainability – Achieve long term financial sustainability.

Organizational Capacity, Effectiveness & Efficiency – To efficiently & effectively provide the highest quality of public services.

Quality of Life – these six areas focus on the overall experience when provided by the city.

Community Character – Promote desirable growth with a hometown atmosphere.

Opportunity – Promote an environment that encourages economic and educational opportunity.

Community Culture – Develop a specific identity for Crestview.

FINANCIAL IMPACT

The fees for the comprehensive plan amendment have been waived for this application as it was received during the moratorium on annexation fees. There is no additional cost of advertising as the comprehensive plan amendment request was included in the advertisement for annexation.

RECOMMENDED ACTION

Staff respectfully requests adoption of Ordinance 1825 and move to second reading.

Attachments

1. Exhibit Packet - Jones Rd

ORDINANCE: 1825

AN ORDINANCE OF THE CITY OF CRESTVIEW, FLORIDA, AMENDING ITS ADOPTED COMPREHENSIVE PLAN; PROVIDING FOR AUTHORITY; PROVIDING FOR FINDINGS OF FACT; PROVIDING FOR PURPOSE; PROVIDING FOR CHANGING THE FUTURE LAND USE DESIGNATION FROM OKALOOSA COUNTY LOW DENSITY RESIDENTIAL TO RESIDENTIAL (R) ON APPROXIMATELY 115.94 ACRES, MORE OR LESS, IN SECTION 5, TOWNSHIP 3 NORTH, RANGE 23 WEST; PROVIDING FOR FUTURE LAND USE MAP AMENDMENT; PROVIDING FOR SEVERABILITY; PROVIDING FOR SCRIVENER'S ERRORS; PROVIDING FOR LIBERAL INTERPRETATION; PROVIDING FOR REPEAL OF CONFLICTING CODES AND ORDINANCES; AND PROVIDING FOR AN EFFECTIVE DATE.

BE IT ORDAINED BY THE CITY COUNCIL OF CRESTVIEW, FLORIDA, AS FOLLOWS:

SECTION 1 – AUTHORITY. The authority for enactment of this Ordinance is Section 2 of the City Charter, §163.3187 F.S., §166.021 F.S., §166.041 F.S. and the adopted Comprehensive Plan.

SECTION 2 – FINDINGS OF FACT. The City Council of the City of Crestview finds the following:

A. This amendment will promote compact, orderly development and discourage urban sprawl; and

B. A public hearing has been conducted after "due public notice" by the Crestview Planning Board sitting as the Local Planning Agency with its recommendations reported to the City Council; and

C. A public hearing has been conducted by the City Council after "due public notice"; and

D. This amendment involves changing the future land use designation from Okaloosa County Low Density Residential to Residential (R) on a parcel of land containing 115.94 acres, more or less, lying within the corporate limits of the City; and

E. This amendment is consistent with the adopted Comprehensive Plan and is in the best interests of the City and its citizens.

SECTION 3 – PURPOSE. The purpose of this Ordinance is to adopt an amendment to the "City of Crestview Comprehensive Plan: 2020." The amendment is described in Section 4 below.

SECTION 4 – FUTURE LAND USE MAP AMENDMENT. The Future Land Use Map is amended by changing the future land use category of a parcel containing approximately 115.94 acres of land, more or less, from Okaloosa County Low Density Residential to Residential (R). For the purposes of this Ordinance and Comprehensive Plan Amendment, the 115.94 acres, more or less, is known as Parcel 05-3N-23-0000-0003-0000 and commonly described as:

THE SOUTHWEST QUARTER OF THE NORTHEAST QUARTER AND THE

NORTHWEST QUARTER OF THE SOUTHEAST QUARTER, AND THE NORTHEAST QUARTER OF THE SOUTHWEST QUARTER LESS AND EXCEPT, THE FOLLOWING STRIP DESCRIBED AS FOLLOWS:

BEGINNING AT THE INTERSECTION OF THE EXTENSION OF THE EASTERLY RIGHT OF WAY LINE OF JONES ROAD WITH THE SOUTH LINE OF THE NORTHWEST QUARTER OF THE SOUTHEAST QUARTER OF SECTION 5, TOWNSHIP 3 NORTH, RANGE 23 WEST; THENCE NORTH FIFTY FEET; THENCE WEST ALONG A LINE PARALLEL WITH THE SOUTH LINES OF THE NORTHWEST QUARTER OF THE SOUTHEAST QUARTER AND THE NORTHEAST AND NORTHWEST QUARTERS OF THE SOUTHWEST QUARTER TO THE POINT OF INTERSECTION WITH THE WEST LINE OF THE EAST SIXTY FOUR FEET (64.00') OF THE NORTHWEST QUARTER OF THE SOUTHWEST QUARTER; THENCE SOUTH FIFTY FEET (50.00') TO THE SOUTH LINE OF THE NORTHWEST QUARTER OF THE SOUTHWEST QUARTER; THENCE EAST ALONG THE SOUTH LINES OF THE NORTHWEST AND NORTHEAST QUARTERS OF THE SOUTHWEST QUARTER AND OF THE NORTHWEST QUARTER OF THE SOUTHEAST QUARTER TO THE POINT OF BEGINNING, ALL LYING IN SECTION 5, TOWNSHIP 3 NORTH, RANGE 23 WEST, OKALOOSA COUNTY, FLORIDA.

AND

THE EAST SIXTY FOUR FEET (64.00') OF THE OF THE NORTHWEST QUARTER OF THE OF THE SOUTHWEST QUARTER OF SECTION 5, TOWNSHIP 3 NORTH, RANGE 23 WEST, LOCATED IN OKALOOSA COUNTY FLORIDA.

The Residential (R) Future Land Use Category is hereby imposed on Parcel 05-3N-23-0000-0003-0000. Exhibit A, which is attached hereto and made a part hereof by reference, graphically depicts the revisions to the Future Land Use Map and shows Parcel 05-3N-23-0000-0003-0000 thereon.

SECTION 5 – SEVERABILITY. If any word, phrase, sentence, paragraph or provision of this ordinance or the application thereof to any person or circumstance is held invalid or unconstitutional, such finding shall not affect the other provisions or applications of this ordinance which can be given effect without the invalid or unconstitutional provision or application, and to this end the provisions of this ordinance are declared severable.

SECTION 6 – SCRIVENER'S ERRORS. The correction of typographical errors which do not affect the intent of this Ordinance may be authorized by the City Manager or the City Manager's designee, without public hearing, by filing a corrected or re-codified copy with the City Clerk.

SECTION 7 – ORDINANCE TO BE LIBERALLY CONSTRUED. This Ordinance shall be liberally construed in order to effectively carry out the purposes hereof which are deemed not to adversely affect public health, safety, or welfare.

SECTION 8 – REPEAL OF CONFLICTING CODES, ORDINANCES, AND RESOLUTIONS. All Charter provisions, codes, ordinances and resolutions or parts of charter provisions, codes, ordinances and resolutions or portions thereof of the City of Crestview, in conflict with the provisions of this Ordinance are hereby repealed to the extent of such conflict.

SECTION 9 – EFFECTIVE DATE. The effective date of this plan amendment and ordinance shall be thirty-one (31) days after adoption on second reading by the City Council, unless the amendment is challenged pursuant to §163.3187, F.S. If challenged, the effective date shall be the date a Final Order is issued by the State Land Planning Agency or the Administration Commission finding the amendment in compliance with §163.3184, F.S.

PASSED AND ADOPTED ON SECOND READING BY THE CITY COUNCIL OF CRESTVIEW, FLORIDA ON THE _____ DAY OF _____, 2021.

ATTEST:

_____
ELIZABETH M. ROY
City Clerk

APPROVED BY ME THIS _____DAY OF _____, 2021.

_____
J. B. WHITTEN
Mayor

EXHIBIT A

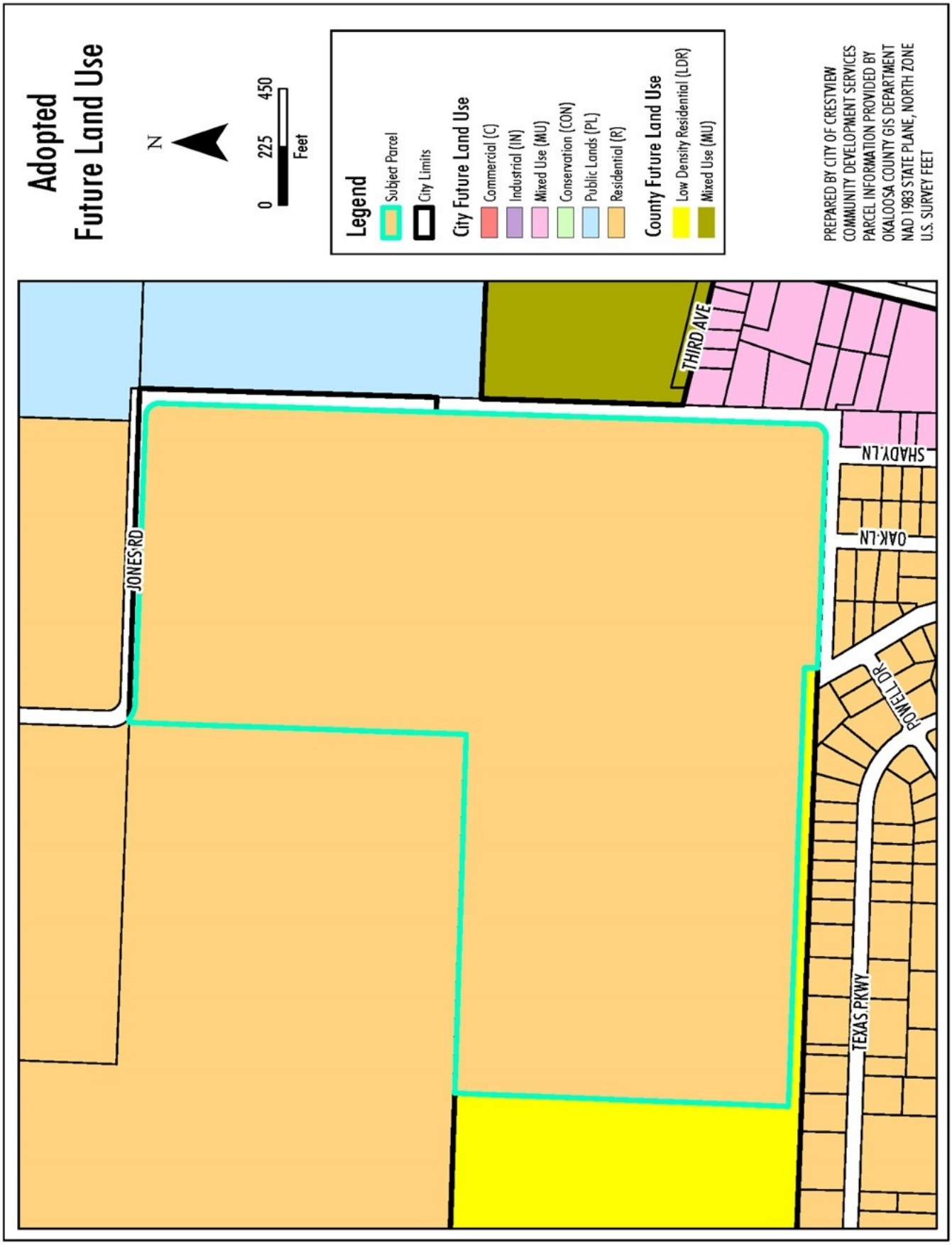
Adopted
Future Land Use
N
0
225
450
Feet
Legend
Subject Parcel
City Limits
City Future Land Use
Commercial (C)
Industrial (IN)
Mixed Use (MU)
Conservation (CON)
Public Lands (PL)
Residential (R)
County Future Land Use
Low Density Residential (LDR)
Mixed Use (MU)
PREPARED BY CITY OF CRESTVIEW
COMMUNITY DEVELOPMENT SERVICES
PARCEL INFORMATION PROVIDED BY
OKALOOSA COUNTY GIS DEPARTMENT
NAD 1983 STATE PLANE, NORTH ZONE
U.S. SURVEY FEET
JONES RD
THIRD AVE
SHADY LN
OAK LN
POWELL DR
TEXAS PKWY

Vicinity Map

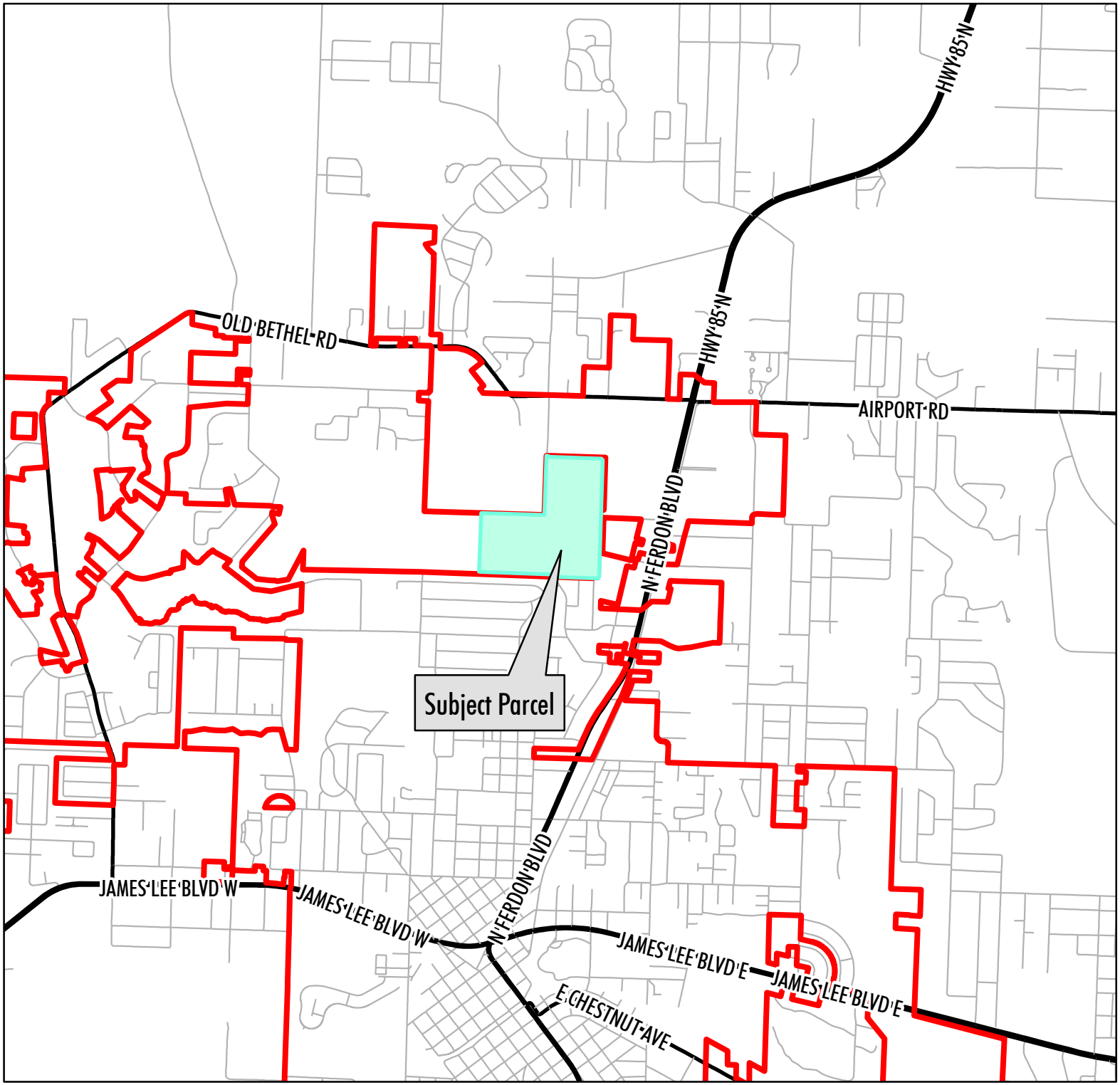

N

Not to Scale

PREPARED BY CITY OF CRESTVIEW
COMMUNITY DEVELOPMENT SERVICES
PARCEL INFORMATION PROVIDED BY
OKALOOSA COUNTY GIS DEPARTMENT
NAD 1983 STATE PLANE, NORTH ZONE
U.S. SURVEY FEET

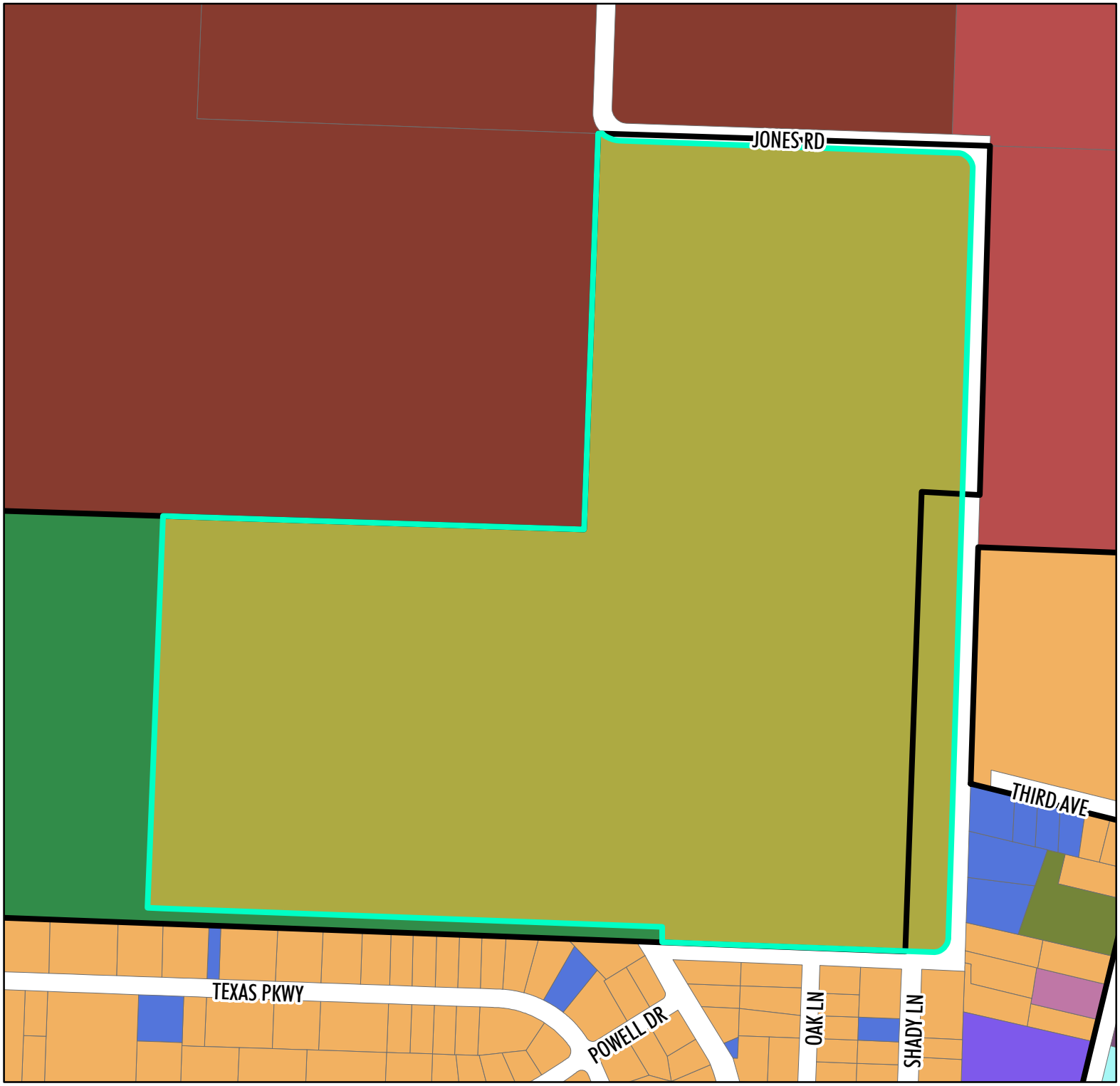

Existing Use

N

0 225 450

Feet

Legend

- Subject Parcel
- City Limits

Existing Use

- Improved A
- No AG Acre
- Office
- Public School
- Single Family
- Timberland
- Vacant
- Vehicle Sale
- Warehouse

PREPARED BY CITY OF CRESTVIEW
COMMUNITY DEVELOPMENT SERVICES
PARCEL INFORMATION PROVIDED BY
OKALOOSA COUNTY GIS DEPARTMENT
NAD 1983 STATE PLANE, NORTH ZONE
U.S. SURVEY FEET

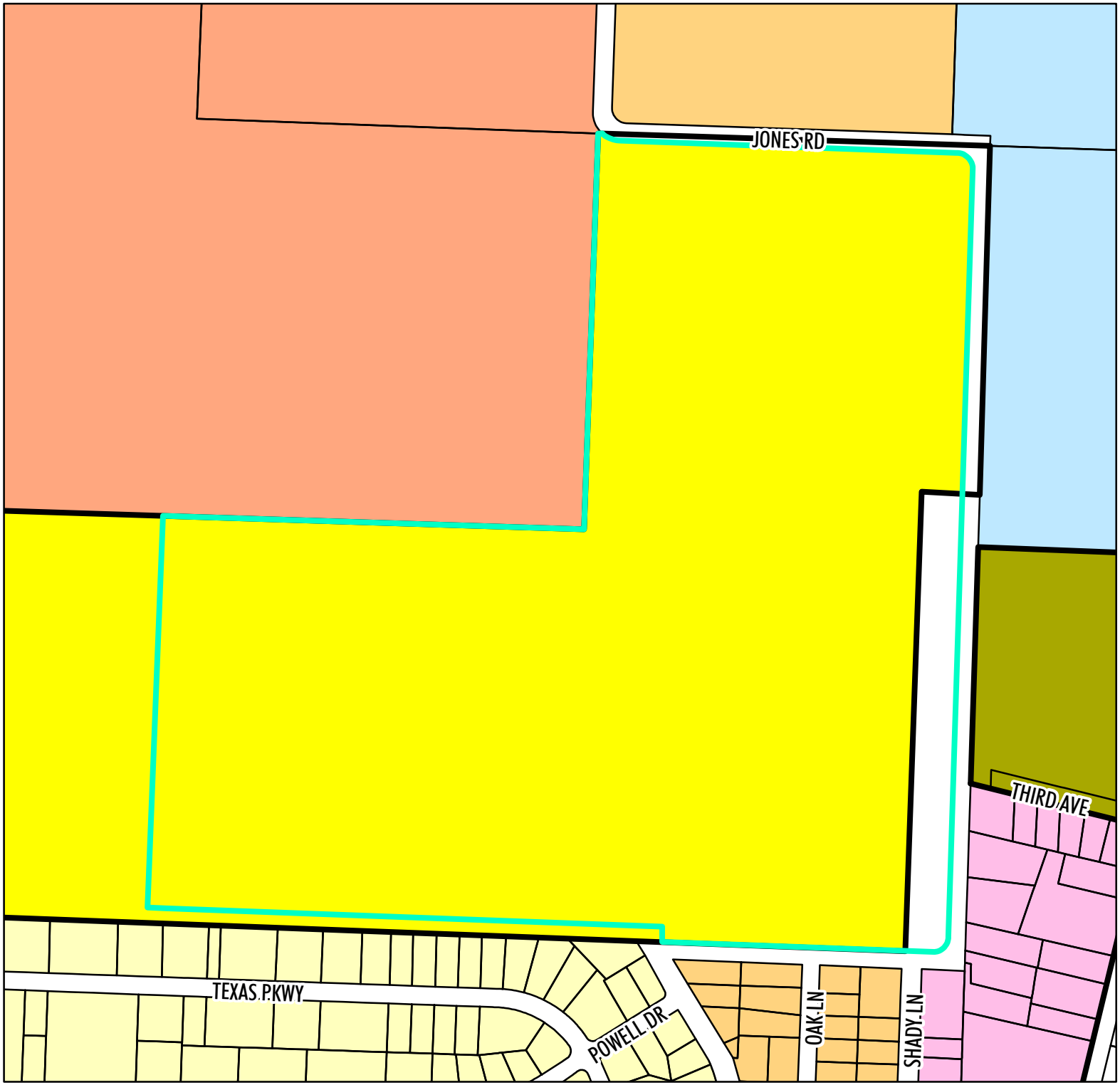

Current Zoning

N

0 225 450

Feet

Legend

- Subject Parcel
- City Limits

City Zoning

- Single Family Low Density District (R-1)
- Single Family Medium Density District (R-2)
- Single and Multi-Family Dwelling District (R-3)
- Mixed Use (MU)
- Commercial (C-1)
- Commercial (C-2)
- Industrial (IN)
- Public Lands (P)
- Conservation (E)

County Zoning

- Residential - 1 (R-1)
- Mixed Use (MU)

PREPARED BY CITY OF CRESTVIEW
COMMUNITY DEVELOPMENT SERVICES
PARCEL INFORMATION PROVIDED BY
OKALOOSA COUNTY GIS DEPARTMENT
NAD 1983 STATE PLANE, NORTH ZONE
U.S. SURVEY FEET

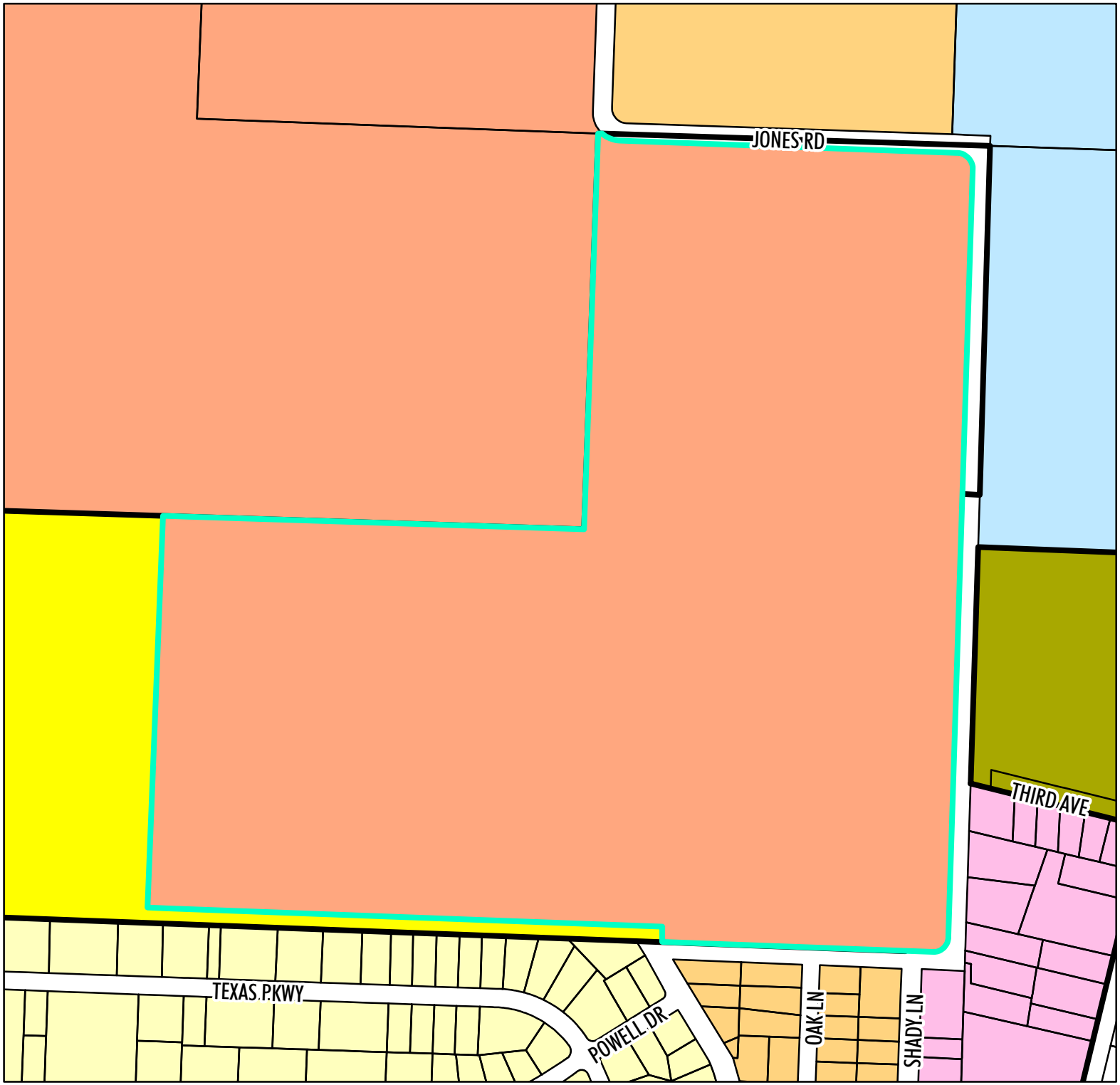

Proposed Zoning

N

0 225 450

Feet

Legend

- Subject Parcel
- City Limits

City Zoning

- Single Family Low Density District (R-1)
- Single Family Medium Density District (R-2)
- Single and Multi-Family Dwelling District (R-3)
- Mixed Use (MU)
- Commercial (C-1)
- Commercial (C-2)
- Industrial (IN)
- Public Lands (P)
- Conservation (E)

County Zoning

- Residential - 1 (R-1)
- Mixed Use (MU)

PREPARED BY CITY OF CRESTVIEW
COMMUNITY DEVELOPMENT SERVICES
PARCEL INFORMATION PROVIDED BY
OKALOOSA COUNTY GIS DEPARTMENT
NAD 1983 STATE PLANE, NORTH ZONE
U.S. SURVEY FEET

Current Future Land Use

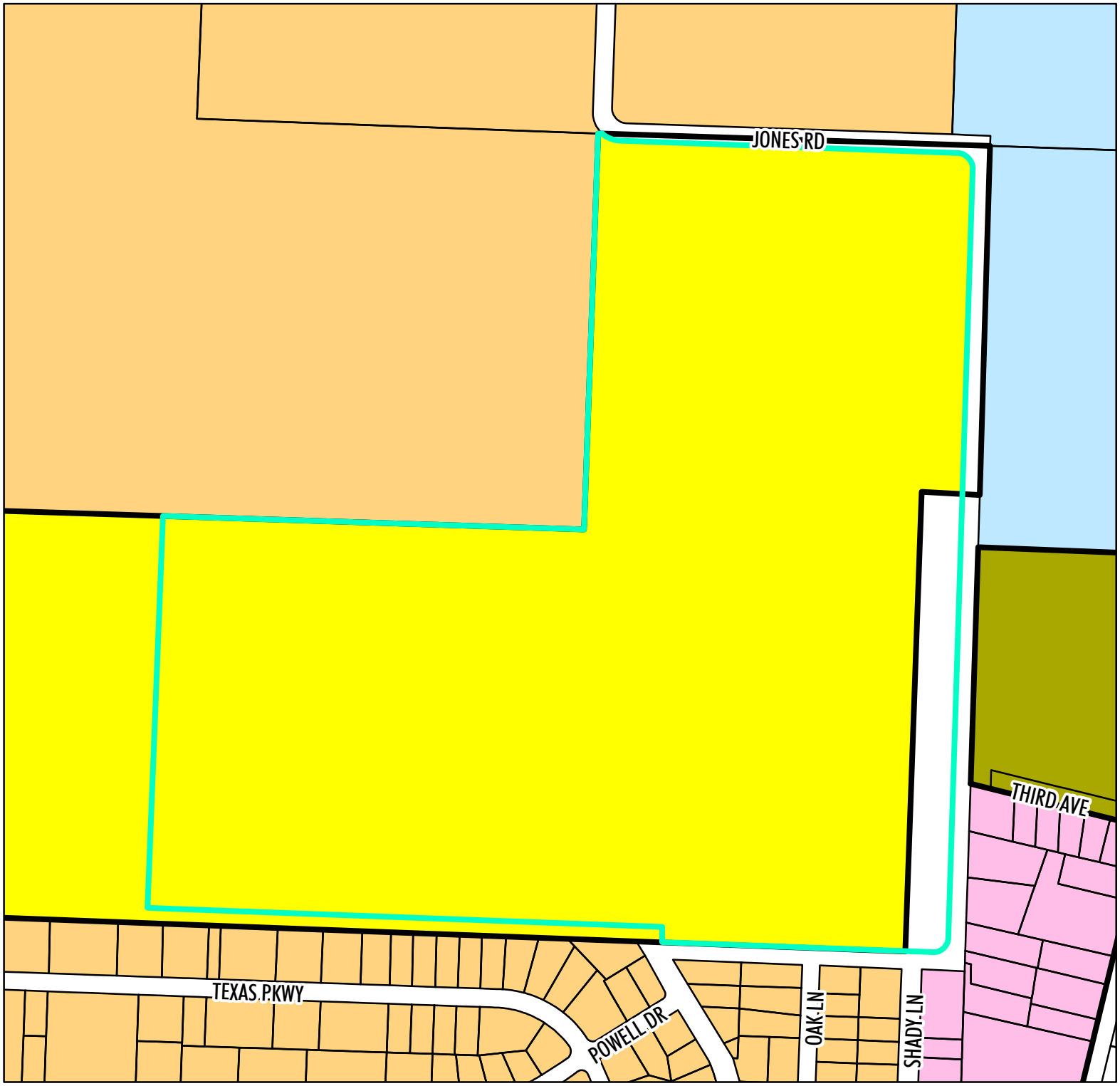

N

0 225 450

Feet

Legend

- Subject Parcel
- City Limits

City Future Land Use

- Commercial (C)
- Industrial (IN)
- Mixed Use (MU)
- Conservation (CON)
- Public Lands (PL)
- Residential (R)

County Future Land Use

- Low Density Residential (LDR)
- Mixed Use (MU)

PREPARED BY CITY OF CRESTVIEW
COMMUNITY DEVELOPMENT SERVICES
PARCEL INFORMATION PROVIDED BY
OKALOOSA COUNTY GIS DEPARTMENT
NAD 1983 STATE PLANE, NORTH ZONE
U.S. SURVEY FEET

Proposed Future Land Use

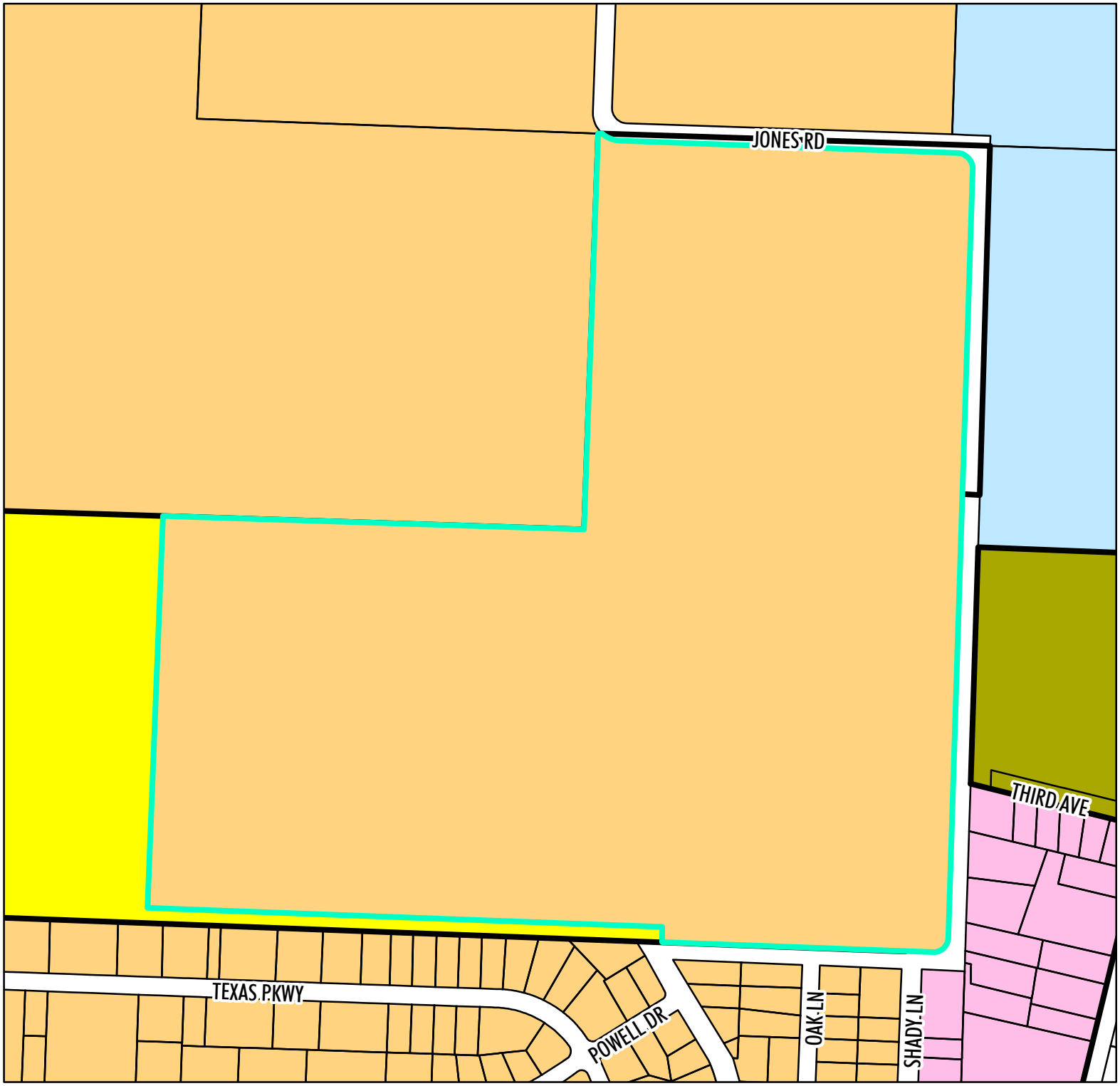

N

0 225 450

Feet

Legend

- Subject Parcel
- City Limits

City Future Land Use

- Commercial (C)
- Industrial (IN)
- Mixed Use (MU)
- Conservation (CON)
- Public Lands (PL)
- Residential (R)

County Future Land Use

- Low Density Residential (LDR)
- Mixed Use (MU)

PREPARED BY CITY OF CRESTVIEW
COMMUNITY DEVELOPMENT SERVICES
PARCEL INFORMATION PROVIDED BY
OKALOOSA COUNTY GIS DEPARTMENT
NAD 1983 STATE PLANE, NORTH ZONE
U.S. SURVEY FEET

CITY OF CRESTVIEW

Item # 8.3.

Staff Report

CITY COUNCIL MEETING DATE: May 10, 2021
TYPE OF AGENDA ITEM: 1st reading after PDB

TO:	Mayor and City Council
CC:	City Manager, City Clerk, Staff and Attorney
FROM:	Trae Duley, Planning Administrator
DATE:	5/6/2021
SUBJECT:	Ordinance 1826 - Jones Road Rezoning

BACKGROUND:

On April 8, 2021 staff received an application to annex and to amend the comprehensive plan and zoning designations for property located at 331 Jones Road.

The subject property is currently located within unincorporated Okaloosa County with a future land use and zoning designation of Low Density Residential and Residential-1, respectively.

The application requests the Single and Multi-Family Dwelling (R-3) zoning designation for the property.

The Planning and Development Board recommended approval of the request on May 3, 2021.

DISCUSSION:

The property description is as follows:

Property Owner:	Moulton, Richard C
Parcel ID:	05-3N-23-0000-0003-0000
Site Size:	115.94 acres
Current FLU:	Okaloosa County Low Density Residential
Current Zoning:	Okaloosa County Residential-1
Current Land Use:	Vacant

The following table provides the surrounding land use designations, zoning districts, and existing uses.

Direction	FLU	Zoning	Existing Use
North	Residential (R)	Single-Family Low-Density District (R-1)	Vacant
East	Public Lands (PL), Okaloosa County Mixed Use, & Mixed Use (MU)	Public Lands (PL), Okaloosa County Mixed Use, & Mixed Use (MU)	Public School, Residential, & Vacant
South	Residential (R)	Single-Family Low-Density District (R-1), Single-Family Medium-Density District (R-2), & Mixed Use (MU)	Residential & Vacant
West	Residential (R) & Okaloosa	Single and Multi-Family District	Residential & Vacant

County Mixed Use (R-3) & Okaloosa County Mixed Use

The subject property is currently undeveloped, and a development application has not been submitted. Based on the requested land-use and zoning designations, the property should be developed residentially.

Staff reviewed the request for rezoning and finds the following:

- The proposed zoning is consistent with the proposed future land use designation.
- The uses within the requested zoning district are compatible with uses in the adjacent zoning districts.
- The requested use is not substantially more or less intense than allowable development on adjacent parcels.

Courtesy notices were mailed to property owners within 300 feet of the subject property on April 12, 2021. The property was posted on April 20, 2021. An advertisement ran in the Crestview News Bulletin on April 21, 2021.

GOALS & OBJECTIVES

This item is consistent with the goals in A New View Strategic Plan 2020 as follows.

Foundational – these are the four areas of focus that make up the necessary foundation of a successful local government.

Financial Sustainability – Achieve long term financial sustainability.

Organizational Capacity, Effectiveness & Efficiency – To efficiently & effectively provide the highest quality of public services.

Quality of Life – these six areas focus on the overall experience when provided by the city.

Community Character – Promote desirable growth with a hometown atmosphere.

Opportunity – Promote an environment that encourages economic and educational opportunity.

Community Culture – Develop a specific identity for Crestview.

FINANCIAL IMPACT

The fees for the rezoning request have been waived for this application as it was received during the moratorium on annexation fees. There is no additional cost of advertising as the rezoning request was included in the advertisement for annexation.

RECOMMENDED ACTION

Staff respectfully requests adoption of Ordinance 1826 and move to second reading.

Attachments

1. Exhibit Packet - Jones Rd

ORDINANCE: 1826

AN ORDINANCE OF THE CITY OF CRESTVIEW, FLORIDA, PROVIDING FOR THE REZONING OF 115.94 ACRES, MORE OR LESS, OF REAL PROPERTY, LOCATED IN SECTION 5, TOWNSHIP 3 NORTH, RANGE 23 WEST, FROM THE OKALOOSA COUNTY RESIDENTIAL-1 ZONING DISTRICT TO THE SINGLE AND MULTI-FAMILY DWELLING (R-3) ZONING DISTRICT; PROVIDING FOR AUTHORITY; PROVIDING FOR THE UPDATING OF THE CRESTVIEW ZONING MAP; PROVIDING FOR SEVERABILITY; PROVIDING FOR SCRIVENER'S ERRORS; PROVIDING FOR LIBERAL INTERPRETATION; PROVIDING FOR REPEAL OF CONFLICTING CODES AND ORDINANCES; AND PROVIDING FOR AN EFFECTIVE DATE.

BE IT ORDAINED BY THE CITY COUNCIL OF CRESTVIEW, FLORIDA AS FOLLOWS:

SECTION 1 – AUTHORITY. The authority for enactment of this ordinance is Section 166.041, Florida Statutes and Chapter 102, City Code.

SECTION 2 – PROPERTY REZONED. The following described 115.94 acres, more or less, of real property lying within the corporate limits of Crestview, Florida, with 115.94 acres, more or less, being formerly zoned Okaloosa County Residential-1 with the Residential (R) Future Land Use Map designation recently ratified by the City Council through adoption of Ordinance 1825, is hereby rezoned to Single and Multi-Family Dwelling District (R-3) to wit:

PIN # 05-3N-23-0000-0003-0000

THE SOUTHWEST QUARTER OF THE NORTHEAST QUARTER AND THE NORTHWEST QUARTER OF THE SOUTHEAST QUARTER, AND THE NORTHEAST QUARTER OF THE SOUTHWEST QUARTER LESS AND EXCEPT, THE FOLLOWING STRIP DESCRIBED AS FOLLOWS:

BEGINNING AT THE INTERSECTION OF THE EXTENSION OF THE EASTERLY RIGHT OF WAY LINE OF JONES ROAD WITH THE SOUTH LINE OF THE NORTHWEST QUARTER OF THE SOUTHEAST QUARTER OF SECTION 5, TOWNSHIP 3 NORTH, RANGE 23 WEST; THENCE NORTH FIFTY FEET; THENCE WEST ALONG A LINE PARALLEL WITH THE SOUTH LINES OF THE NORTHWEST QUARTER OF THE SOUTHEAST QUARTER AND THE NORTHEAST AND NORTHWEST QUARTERS OF THE SOUTHWEST QUARTER TO THE POINT OF INTERSECTION WITH THE WEST LINE OF THE EAST SIXTY FOUR FEET (64.00') OF THE NORTHWEST QUARTER OF THE SOUTHWEST QUARTER; THENCE SOUTH FIFTY FEET (50.00') TO THE SOUTH LINE OF THE NORTHWEST QUARTER OF THE SOUTHWEST QUARTER; THENCE EAST ALONG THE SOUTH LINES OF THE NORTHWEST AND NORTHEAST QUARTERS OF THE SOUTHWEST QUARTER AND OF THE NORTHWEST QUARTER OF THE SOUTHEAST QUARTER TO THE POINT OF BEGINNING, ALL LYING IN

SECTION 5, TOWNSHIP 3 NORTH, RANGE 23 WEST, OKALOOSA COUNTY, FLORIDA.

AND

THE EAST SIXTY FOUR FEET (64.00') OF THE OF THE NORTHWEST QUARTER OF THE OF THE SOUTHWEST QUARTER OF SECTION 5, TOWNSHIP 3 NORTH, RANGE 23 WEST, LOCATED IN OKALOOSA COUNTY FLORIDA.

SECTION 3 – MAP UPDATE. The Crestview Zoning Map, current edition, is hereby amended to reflect the above changes concurrent with passage of this ordinance, which is attached hereto.

SECTION 4 – SEVERABILITY. If any word, phrase, sentence, paragraph or provision of this ordinance or the application thereof to any person or circumstance is held invalid or unconstitutional, such finding shall not affect the other provisions or applications of this ordinance which can be given effect without the invalid or unconstitutional provision or application, and to this end the provisions of this ordinance are declared severable.

SECTION 5 – SCRIVENER'S ERRORS. The correction of typographical errors which do not affect the intent of this Ordinance may be authorized by the City Manager or the City Manager's designee, without public hearing, by filing a corrected or re-codified copy with the City Clerk.

SECTION 6 – ORDINANCE TO BE LIBERALLY CONSTRUED. This Ordinance shall be liberally construed in order to effectively carry out the purposes hereof which are deemed not to adversely affect public health, safety, or welfare.

SECTION 7 – REPEAL OF CONFLICTING CODES, ORDINANCES, AND RESOLUTIONS. All Charter provisions, codes, ordinances and resolutions or parts of charter provisions, codes, ordinances and resolutions or portions thereof of the City of Crestview, in conflict with the provisions of this Ordinance are hereby repealed to the extent of such conflict.

SECTION 8 – EFFECTIVE DATE. The effective date of this Ordinance shall be the date Comprehensive Plan Amendment is adopted by Ordinance # 1825 and becomes legally effective.

PASSED AND ADOPTED ON SECOND READING BY THE CITY COUNCIL OF CRESTVIEW, FLORIDA ON THE _____ DAY OF _____, 2021.

ATTEST:

_____
ELIZABETH M. ROY
City Clerk

APPROVED BY ME THIS _____DAY OF _____, 2021.

_____
J. B. WHITTEN

Mayor

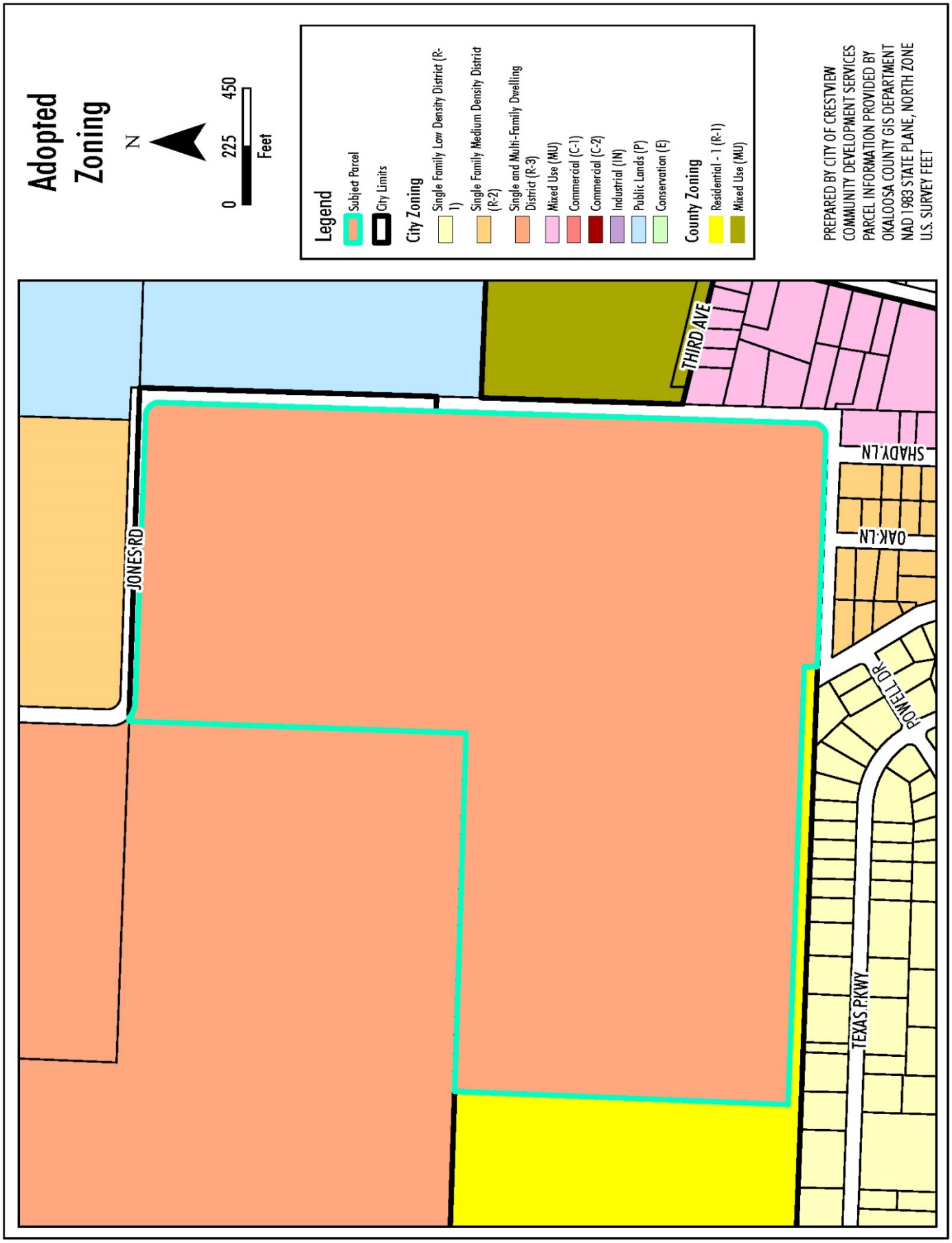
Adopted Zoning
N
0 225 450
Feet
Legend
Subject Parcel
City Limits
City Zoning
Single Family Low Density District (R-1)
Single Family Medium Density District (R-2)
Single and Multi-Family Dwelling District (R-3)
Mixed Use (MU)
Commercial (C-1)
Commercial (C-2)
Industrial (IN)
Public Lands (P)
Conservation (E)
County Zoning
Residential - 1 (R-1)
Mixed Use (MU)
PREPARED BY CITY OF CRESTVIEW
COMMUNITY DEVELOPMENT SERVICES
PARCEL INFORMATION PROVIDED BY
OKALOOSA COUNTY GIS DEPARTMENT
NAD 1983 STATE PLANE, NORTH ZONE
U.S. SURVEY FEET
JONES RD
THIRD AVE
SHADY LN
OAK LN
POWELL DR
TEXAS PKWY

Vicinity Map

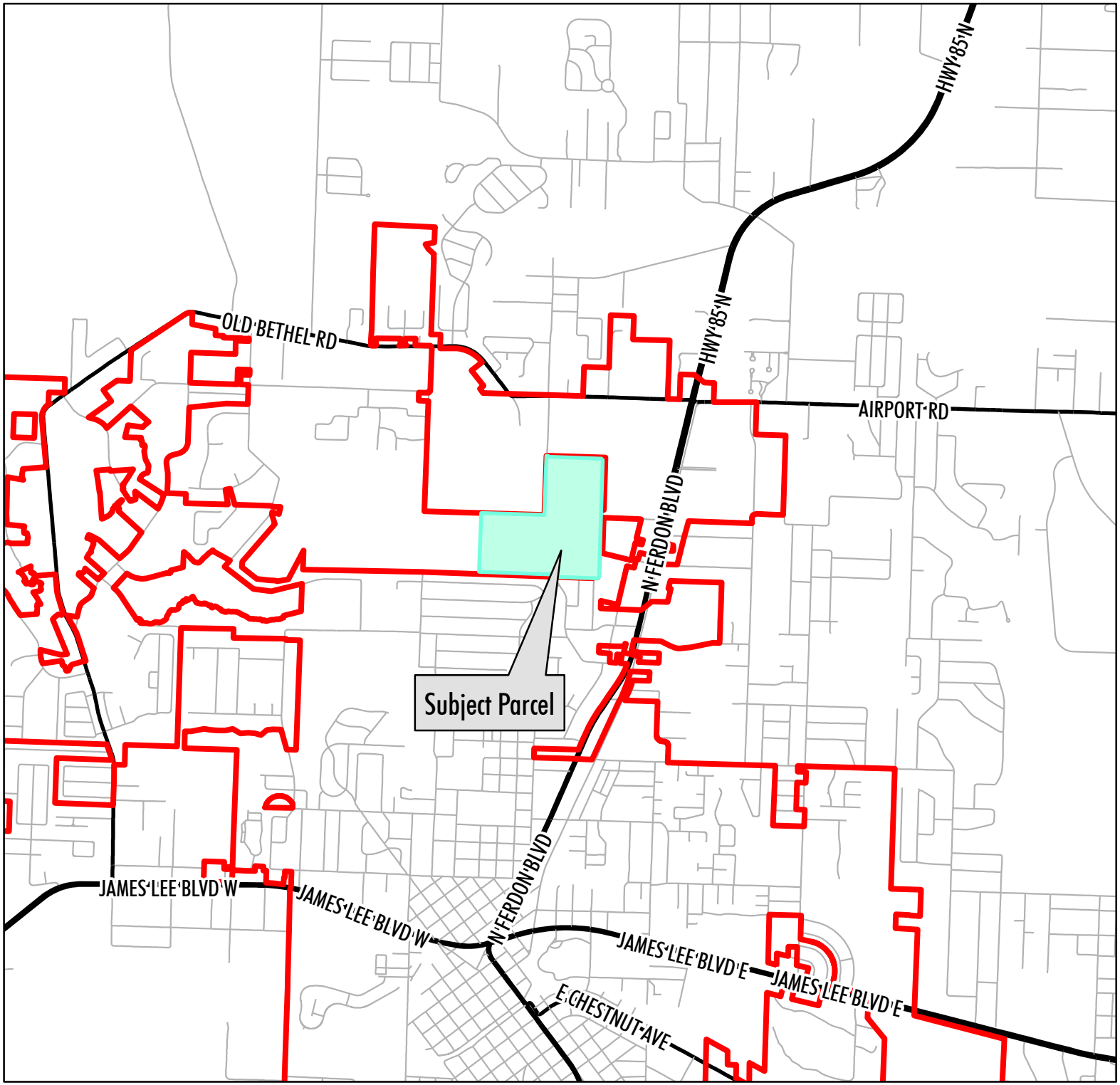

N

Not to Scale

PREPARED BY CITY OF CRESTVIEW
COMMUNITY DEVELOPMENT SERVICES
PARCEL INFORMATION PROVIDED BY
OKALOOSA COUNTY GIS DEPARTMENT
NAD 1983 STATE PLANE, NORTH ZONE
U.S. SURVEY FEET

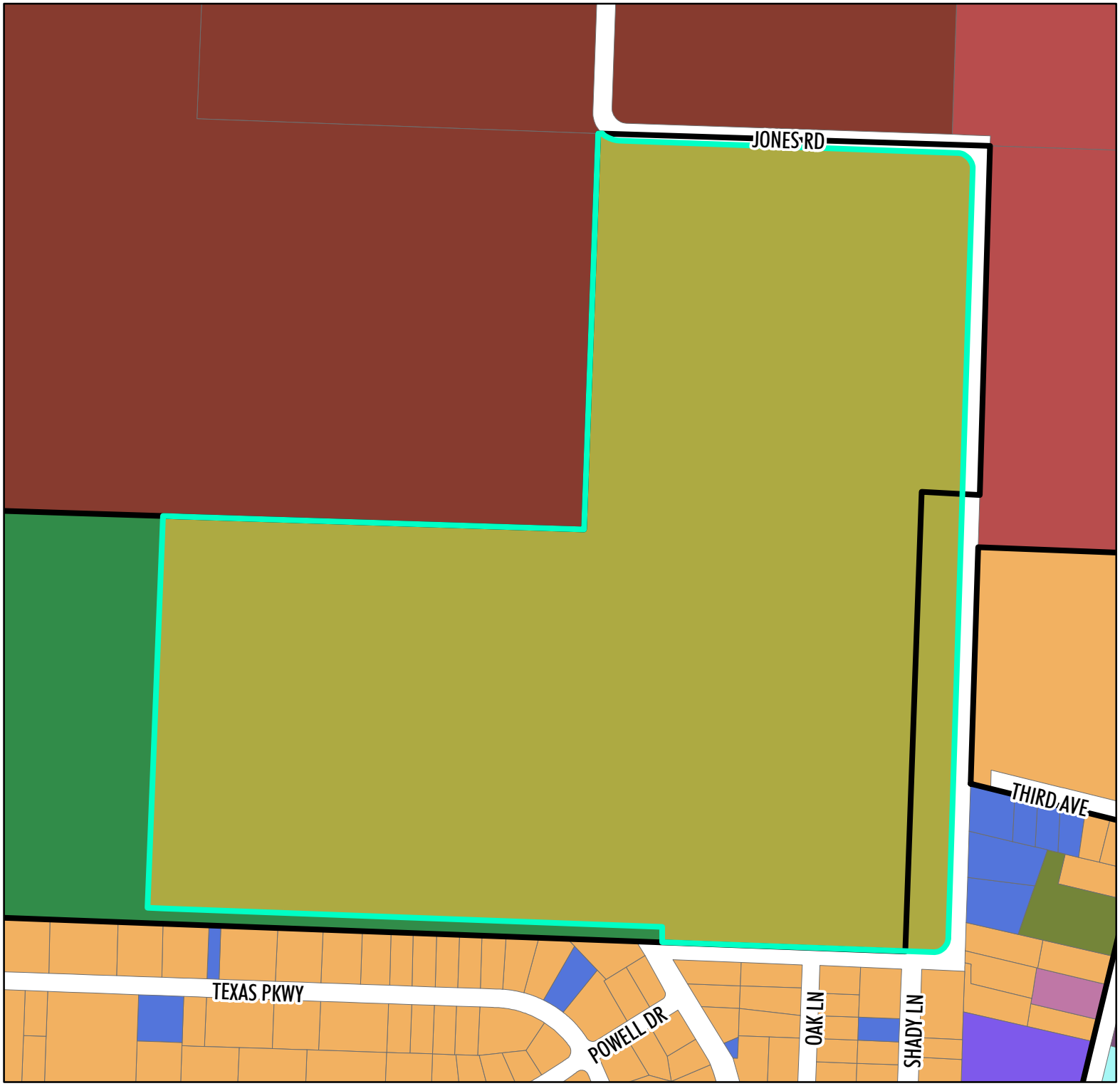

Existing Use

N

0 225 450

Feet

Legend

- Subject Parcel
- City Limits

Existing Use

- Improved A
- No AG Acre
- Office
- Public School
- Single Family
- Timberland
- Vacant
- Vehicle Sale
- Warehouse

PREPARED BY CITY OF CRESTVIEW
COMMUNITY DEVELOPMENT SERVICES
PARCEL INFORMATION PROVIDED BY
OKALOOSA COUNTY GIS DEPARTMENT
NAD 1983 STATE PLANE, NORTH ZONE
U.S. SURVEY FEET

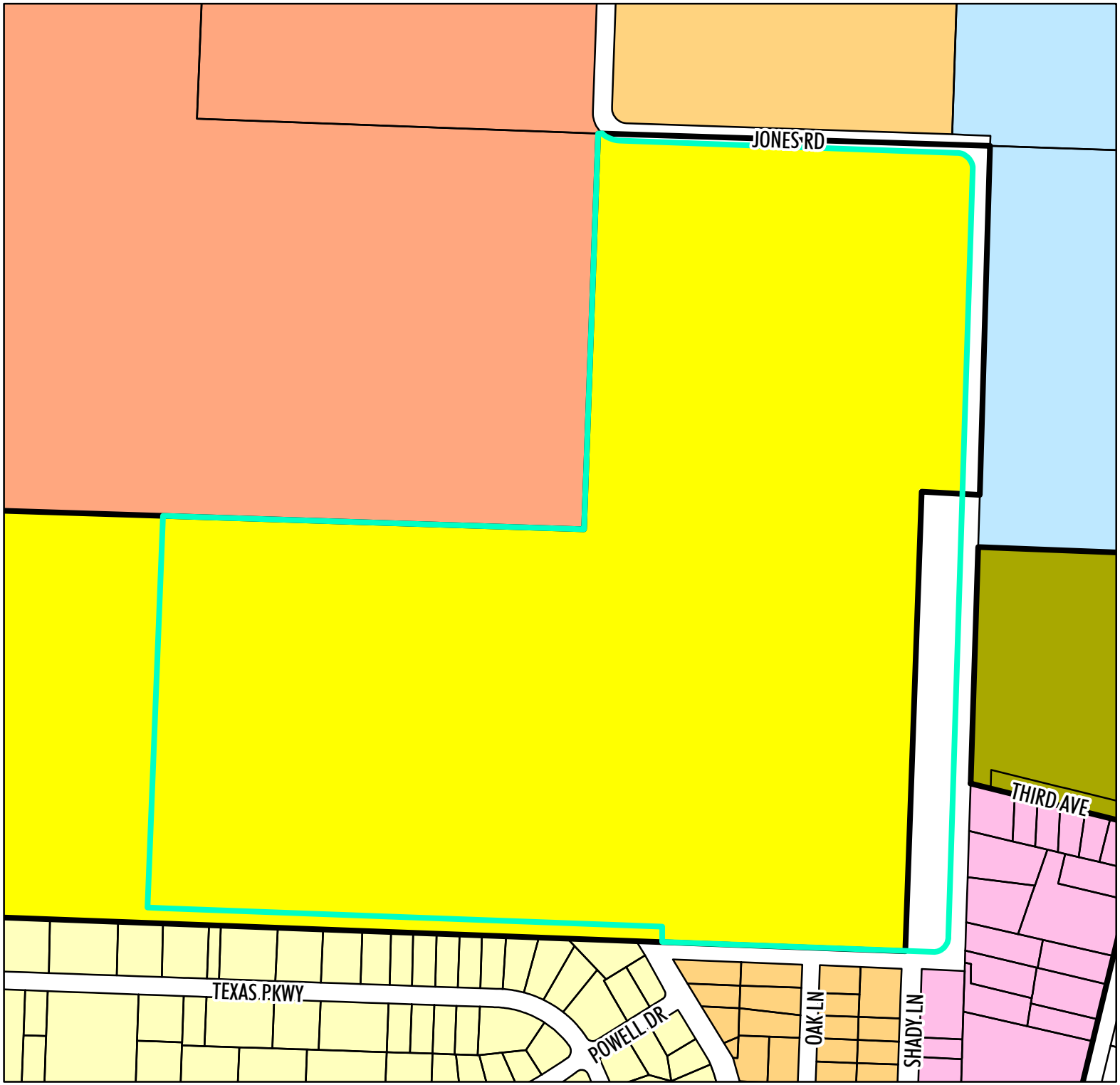

Current Zoning

N

0 225 450

Feet

Legend

- Subject Parcel
- City Limits

City Zoning

- Single Family Low Density District (R-1)
- Single Family Medium Density District (R-2)
- Single and Multi-Family Dwelling District (R-3)
- Mixed Use (MU)
- Commercial (C-1)
- Commercial (C-2)
- Industrial (IN)
- Public Lands (P)
- Conservation (E)

County Zoning

- Residential - 1 (R-1)
- Mixed Use (MU)

PREPARED BY CITY OF CRESTVIEW
COMMUNITY DEVELOPMENT SERVICES
PARCEL INFORMATION PROVIDED BY
OKALOOSA COUNTY GIS DEPARTMENT
NAD 1983 STATE PLANE, NORTH ZONE
U.S. SURVEY FEET

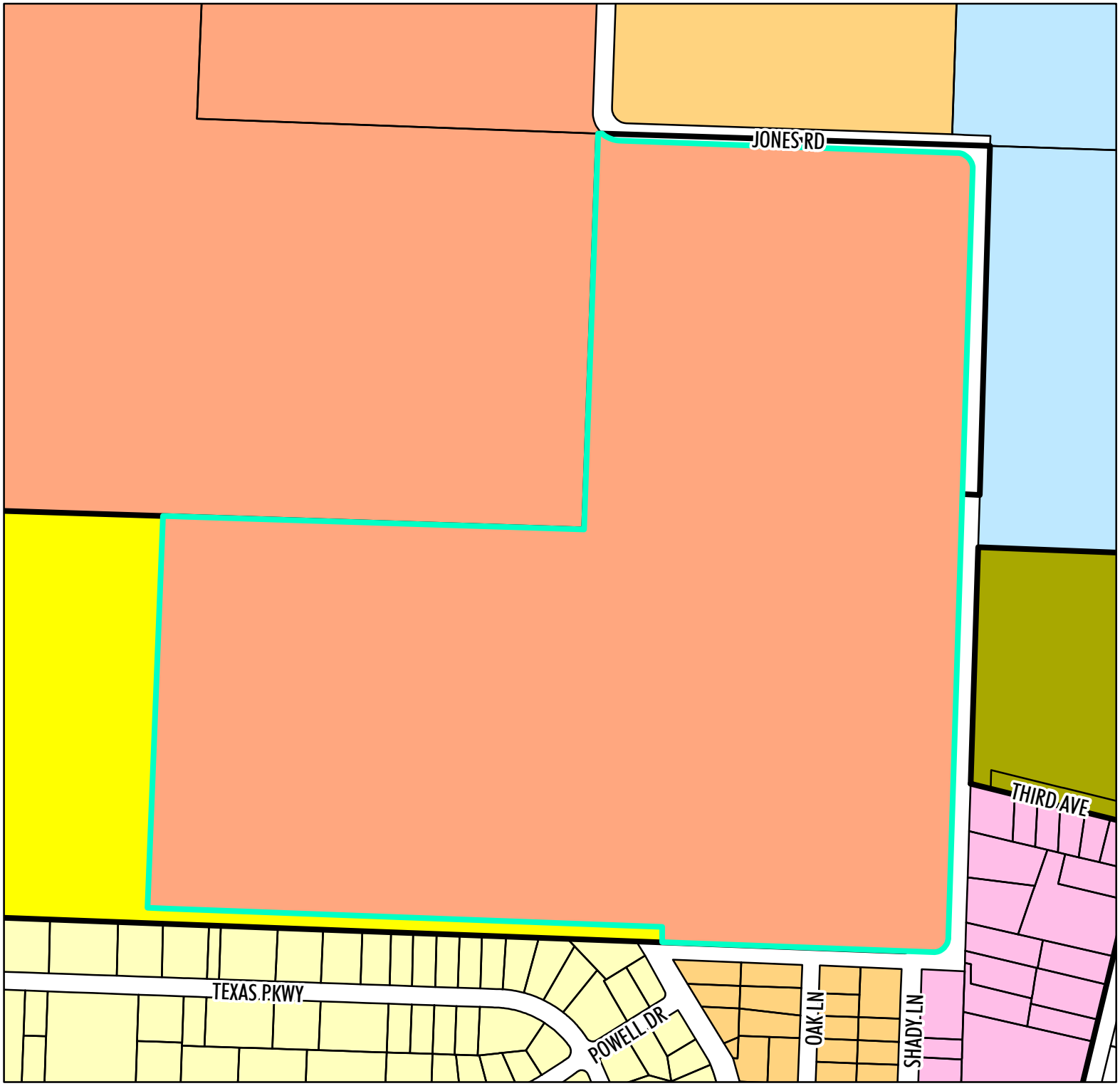

Proposed Zoning

N

0 225 450

Feet

Legend

- Subject Parcel
- City Limits

City Zoning

- Single Family Low Density District (R-1)
- Single Family Medium Density District (R-2)
- Single and Multi-Family Dwelling District (R-3)
- Mixed Use (MU)
- Commercial (C-1)
- Commercial (C-2)
- Industrial (IN)
- Public Lands (P)
- Conservation (E)

County Zoning

- Residential - 1 (R-1)
- Mixed Use (MU)

PREPARED BY CITY OF CRESTVIEW
COMMUNITY DEVELOPMENT SERVICES
PARCEL INFORMATION PROVIDED BY
OKALOOSA COUNTY GIS DEPARTMENT
NAD 1983 STATE PLANE, NORTH ZONE
U.S. SURVEY FEET

Current Future Land Use

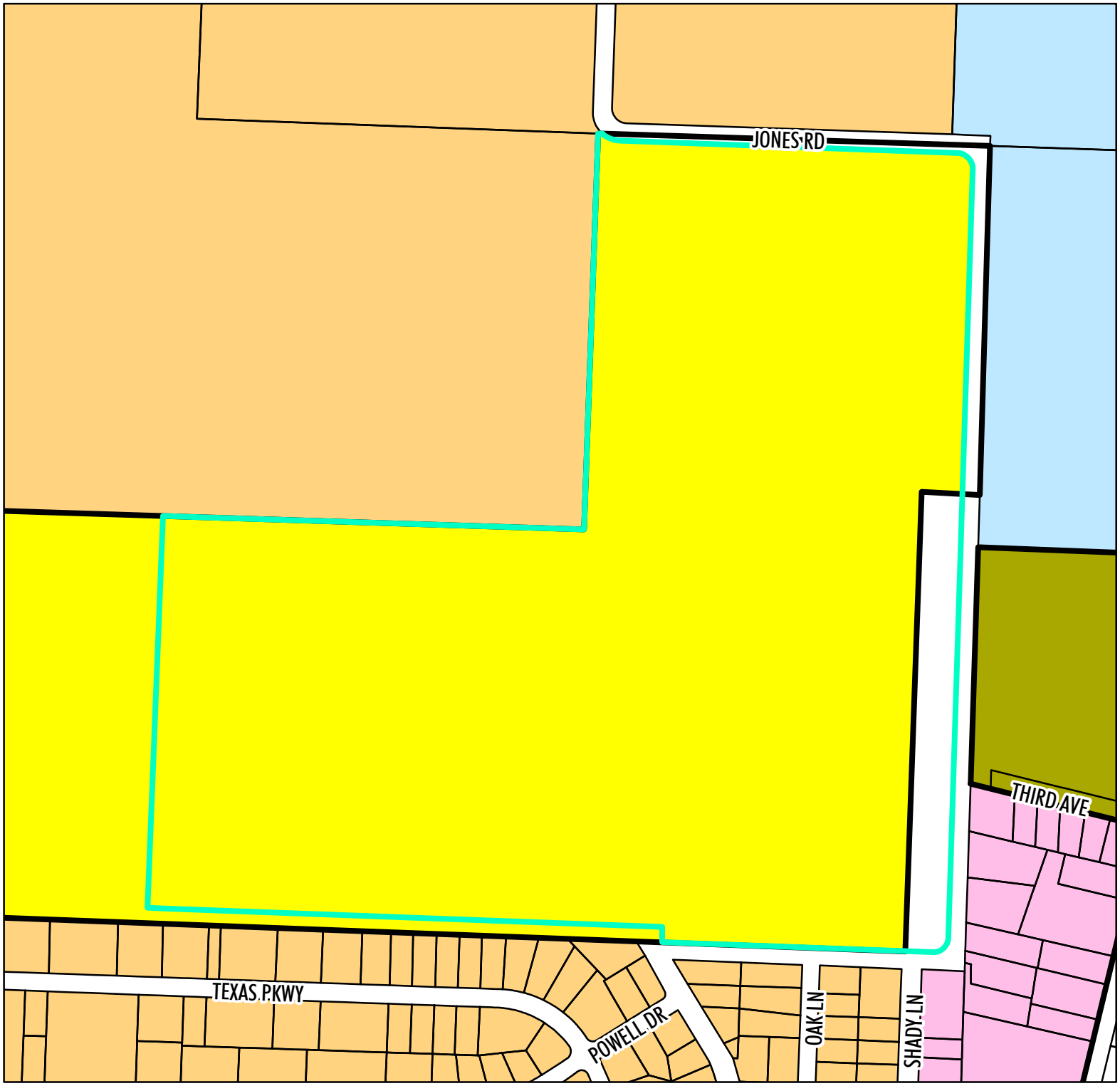

N

0 225 450

Feet

Legend

- Subject Parcel
- City Limits

City Future Land Use

- Commercial (C)
- Industrial (IN)
- Mixed Use (MU)
- Conservation (CON)
- Public Lands (PL)
- Residential (R)

County Future Land Use

- Low Density Residential (LDR)
- Mixed Use (MU)

PREPARED BY CITY OF CRESTVIEW
COMMUNITY DEVELOPMENT SERVICES
PARCEL INFORMATION PROVIDED BY
OKALOOSA COUNTY GIS DEPARTMENT
NAD 1983 STATE PLANE, NORTH ZONE
U.S. SURVEY FEET

Proposed Future Land Use

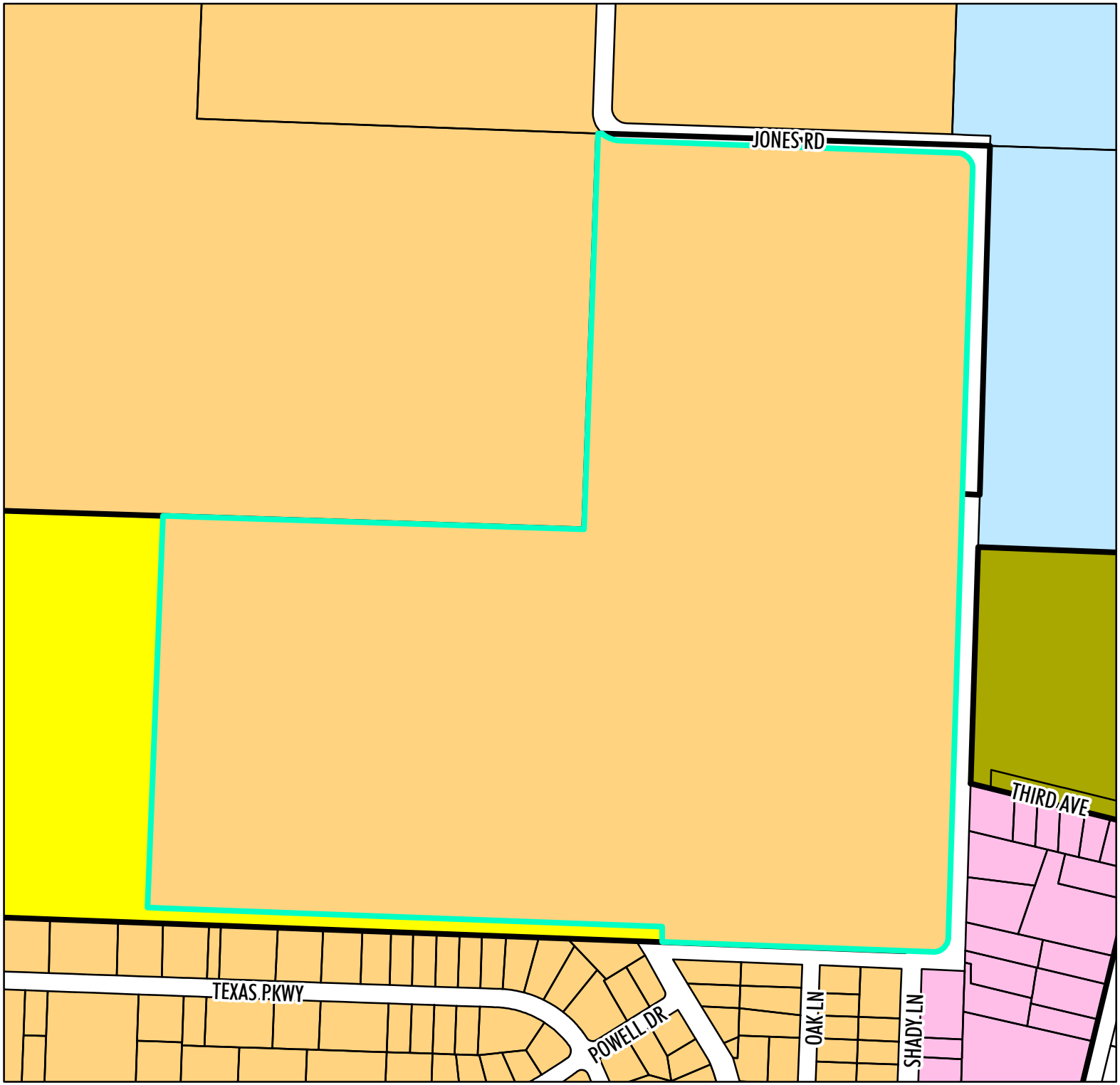

N

0 225 450

Feet

Legend

- Subject Parcel
- City Limits

City Future Land Use

- Commercial (C)
- Industrial (IN)
- Mixed Use (MU)
- Conservation (CON)
- Public Lands (PL)
- Residential (R)

County Future Land Use

- Low Density Residential (LDR)
- Mixed Use (MU)

PREPARED BY CITY OF CRESTVIEW
COMMUNITY DEVELOPMENT SERVICES
PARCEL INFORMATION PROVIDED BY
OKALOOSA COUNTY GIS DEPARTMENT
NAD 1983 STATE PLANE, NORTH ZONE
U.S. SURVEY FEET

CITY OF CRESTVIEW

Item # 10.1.

Staff Report

CITY COUNCIL MEETING DATE: May 10, 2021
TYPE OF AGENDA ITEM: Action Item

TO:	Mayor and City Council
CC:	City Manager, City Clerk, Staff and Attorney
FROM:	Stephen McCosker, Police Chief
DATE:	5/5/2021
SUBJECT:	Memorandum of Understanding with the Florida Department of Corrections

BACKGROUND:

The Crestview Police Department maintains multiple Memorandums of Understanding (MOUs) with agencies they maintain partnerships with. The Florida Department of Corrections has requested an updated Memorandum of Understanding between the Crestview Police Department and the Florida Department of Corrections.

DISCUSSION:

Partnerships between governmental entities is necessary to coordinate inter-departmental relationships and coordinate assistance between multiple agencies. The Crestview Police Department often requests the assistance of the Florida Department of Corrections for the assistance of staffing and use of man-tracking bloodhounds for the tracking of escaped, missing and fleeing persons.

The approval of this MOU would allow the continued partnership between the Crestview Police Department and the Florida Department of Corrections.

GOALS & OBJECTIVES

This item is consistent with the goals in A New View Strategic Plan 2020 as follows;

Foundational- these are the areas of focus that make up the necessary foundation of a successful local government.

Financial Sustainability- Achieve long term financial sustainability

Organizational Capacity, Effectiveness & Efficiency- To efficiently & effectively provide the highest quality of public services

Communication- To engage, inform and educate public and staff

Safety- Ensure the continuous safety of citizens and visitors

Community Culture- Develop a specific identity for Crestview

FINANCIAL IMPACT

There are no financial impacts associated with this MOU.

RECOMMENDED ACTION

Staff respectfully requests the approval of the Memorandum of Understanding between the City of Crestview Police Department and the Florida Department of Corrections.

Attachments

1. Department of Corrections MOU 2021

MEMORANDUM OF AGREEMENT

BETWEEN

THE FLORIDA DEPARTMENT OF CORRECTIONS

AND

CRESTVIEW POLICE DEPARTMENT

This Memorandum of Agreement ("Agreement") is between the Florida Department of Corrections ("Department") and the Crestview Police Department ("Agency"), which are the parties hereto.

WITNESSETH

WHEREAS, multiple Department institutions have canine tracking units used for apprehending escaped offenders;

WHEREAS, the Department wishes to render the assistance of the canine tracking units, upon request, to state and local law enforcement agencies that may require assistance in the apprehension of escaped offenders and missing or endangered persons, to the extent that it is lawfully able to do so without impeding its primary mission; and

WHEREAS, the Agency has requested assistance be available upon their determination of need.

NOW THEREFORE, subject to controlling law, rules, regulations, or to other governing policies and/or procedures, and in consideration of the mutual interests and understandings expressed herein, the parties agree as follows:

I. AGREEMENT TERM AND RENEWAL

A. Agreement Term

This Agreement shall begin on August 29, 2021, or the date on which it is signed by both parties, whichever is later, and shall end on August 28, 2026. In the event this Agreement is signed by the parties on different dates, the latter date shall control.

B. Agreement Renewal

The Department has the option to renew this Agreement for up to an additional five (5) year period beyond the initial agreement term, in whole or in part, upon written agreement of both parties, and upon the same terms and conditions contained herein. Exercise of the renewal option is at the Department's sole discretion and shall be conditioned, at a minimum, on the Agency's performance of the Agreement. The Department, if it desires to exercise its renewal option, will provide written notice to the Agency no later than 30 calendar days prior to the Agreement expiration date.

II. SCOPE OF AGREEMENT

A. Overview

The parties shall work together to maximize the efficiency of the administration of the Department's canine tracking units by facilitating the exchange of information between the parties and utilizing a team problem-solving approach to address the issues facing their respective offices.

B. Responsibilities of the Department

1. The Department will provide the assistance of the canine tracking units at the Okaloosa Correctional Institution, Santa Rosa Correctional Institution, and Walton Correctional Institution whenever requested by the Agency, in accordance with applicable Department rules and procedures. However, the Department's ability to provide the assistance of the canine tracking units will be subject to operational constraints. Therefore, this Agreement does not imply or create any liability, if the Department is unable to provide such assistance.

2. Upon request of the Agency, the Warden, or designee, must approve authorization to provide assistance at the institution where the request for assistance was received.

3. The Warden, or designee, will be responsible for the selection of the canine tracking unit, which will consist of the canine sergeant and two (2) additional correctional officers.

4. In the event that a canine tracking unit is not available from the institution where the request was received, the Warden, or designee, will contact the Central Office Emergency Action Center (EAC) on-call officer/staff for assistance from another canine tracking unit. The on-call officer/staff will determine the closest available canine tracking unit(s) and dispatch them, if necessary. The Agency may request direct assistance through the Department's EAC by calling (850) 922-6867.

C. Responsibilities of the Agency

1. The Agency's Agreement Manager, or designee, listed in Section IV., B., Agreement Managers, shall request the assistance of a canine tracking unit from one of the institutions in Section IV., B., Agreement Managers, of this Agreement.

2. The Agency agrees that the supervising authority of the Agency shall provide the Warden, or designee, of the institution where the request for assistance was received, with information concerning the level of risk that will be involved in the search (e.g., whether the tracked person is armed, has a history of violence, or has a history of a mental disorder that could cause confrontational behavior).

3. The Agency, when requesting assistance, must provide a certified law enforcement officer to accompany the canine tracking unit when the purpose of the search is the apprehension of an offender or escapee.

D. Regulations Governing Use

Failure of the Agency, and/or any of its personnel, to comply with the terms of this Agreement may result in the suspension of the use of the canine tracking units.

III. FINANCIAL OBLIGATIONS

The parties acknowledge that this Agreement is not intended to create financial obligations between the parties. However, if costs are incurred as a result of either, or both of the parties performing their duties or responsibilities under this Agreement, each party agrees to be responsible for their own costs.

IV. AGREEMENT MANAGEMENT

A. Department's Agreement Administrator

The Department's Agreement Administrator is responsible for maintaining the official Agreement file, processing any amendments, termination of the Agreement, and maintaining records of all formal correspondence between the parties regarding the administration of this Agreement.

The title, address, and telephone number of the Department's Agreement Administrator is:

Contract Administrator
Bureau of Procurement
Florida Department of Corrections
501 South Calhoun Street
Tallahassee, Florida 32399-2500
Telephone: (850) 717-3681
Fax: (850) 488-7189

B. Agreement Managers

The parties have identified the following individuals as Agreement Managers. These individuals are responsible for enforcing performance of the Agreement terms and conditions and shall serve as liaison regarding issues arising out of this Agreement.

FOR THE DEPARTMENT
Warden
Okaloosa Correctional Institution
3189 Colonel Greg Malloy Road
Crestview, Florida 32539
Telephone: (850) 682-0931
Email:
OkaloosaCI.WardenOffice@fdc.myflorida.com

FOR THE DEPARTMENT
Warden
Santa Rosa Correctional Institution
5850 East Milton Road
Milton, Florida 32583
Telephone: (850) 981-5199
Email:
SantaRosaCI.WardenOffice@fdc.myflorida.com

FOR THE DEPARTMENT
Warden
Walton Correctional Institution
691 Institution Road
De Funiak Springs, Florida 32433
Telephone: (850) 951-6401
Email:
WaltonCI.WardenOffice@fdc.myflorida.com

FOR THE AGENCY
Stephen G. McCosker
Chief of Police
201 Stillwell Boulevard
Crestview, Florida 32539
Telephone: (850) 682-3544
Email:
McCoskerS@crestviewpd.org

V. REVIEW AND MODIFICATION

Upon request of either party, both parties will review this Agreement in order to determine whether its terms and conditions are still appropriate. The parties agree to renegotiate terms and conditions hereof if it is mutually determined that significant changes in this Agreement are necessary. There are no obligations to agree by either party.

After execution of this Agreement, modifications to the provisions contained herein, except for Section IV., AGREEMENT MANAGEMENT, shall be valid only through the execution of a formal written amendment to the Agreement. Any changes in the information contained in Section IV., AGREEMENT MANAGEMENT, will be provided to the other party, in writing, and a copy of the written notification shall be maintained in the official Agreement record.

VI. TERMINATION

This Agreement may be terminated at any time upon the mutual consent of both parties, or unilaterally by either party, upon no less than 30 calendar days' notice. Notice shall be delivered by express mail or other methods whereby a receipt of delivery may be obtained.

In addition, this Agreement may be terminated with 24 hours' notice by the Department or the Agency for any failure of either party to comply with the terms of this Agreement or any applicable Florida law.

VII. OTHER CONDITIONS

A. Public Records Law

The Agency agrees to allow the Department and the public access to any documents, papers, letters, or other materials subject to the provisions of Chapter 119 and Section 945.10, Florida Statutes (F.S.), made or received by the Agency in conjunction with this Agreement. The Agency's refusal to comply with this provision shall constitute sufficient cause for termination of this Agreement.

B. Sovereign Immunity

The Agency and the Department are State agencies or political subdivisions as defined in Section 768.28, F.S., and agree to be fully responsible for acts and omissions of their own agents or employees to the extent permitted by law. Nothing herein is intended to serve as a waiver of sovereign immunity by either party to which sovereign immunity may be applicable. Further, nothing herein shall be construed as consent by a State agency or political subdivision of the State of Florida to be sued by third parties in any matter arising out of this Agreement.

C. Confidentiality

The Agency shall ensure all staff assigned to this Agreement maintains confidentiality with reference to individuals receiving services in accordance with applicable local, state, and federal laws, rules, and regulations. The Department and the Agency agree that all information and records obtained in the course of providing services under this Agreement shall be subject to confidentiality and disclosure provisions of applicable federal and state statutes and regulations adopted pursuant thereto.

The Agency agrees to keep all Department personnel information (i.e., Department staff telephone numbers, addresses, etc.) strictly confidential and shall not disclose said information to any person, unless released, in writing, by the Department.

D. Independent Agent Status

The Agency shall be considered an independent Agent in the performance of its duties and responsibilities under this Agreement. The Department shall neither have nor exercise any control or direction over the methods by which the Agency shall perform its work and functions other than as provided herein. Nothing in this Agreement is intended to, nor shall be deemed to constitute, a partnership or a joint venture between the parties.

E. Disputes

Any dispute concerning the performance of the terms of this Agreement shall be resolved informally by the Agreement Managers. Any dispute that cannot be resolved informally shall be reduced to writing and delivered to the Department's Assistant Deputy Secretary of Institutions. The Department's Assistant Deputy Secretary of Institutions shall decide the dispute, reduce the decision to writing, and deliver a copy to the Agency, the Department's Agreement Manager, and the Department's Agreement Administrator.

F. Notices

All notices required or permitted by this Agreement shall be given, in writing, and by hand-delivery or email to the respective addresses of the parties as set forth in Section IV., AGREEMENT MANAGEMENT, above. All notices by hand-delivery shall be deemed received on the date of delivery, and all notices by email shall be deemed received when they are transmitted and not returned as undelivered or undeliverable. Either party may change the names, addresses, or telephone numbers set forth in Section IV., AGREEMENT MANAGEMENT, above by written notice given to the other party as provided above.

G. Prison Rape Elimination Act (PREA)

The Agency shall report any violations of the Prison Rape Elimination Act (PREA), Federal Rule 28 C.F.R. Part 115, to the Department’s Agreement Manager, or designee.

H. No Third-Party Beneficiaries

Except as otherwise expressly provided herein, neither this Agreement, nor any amendment, addendum or exhibit attached hereto, nor term, provision or clause contained therein, shall be construed as being for the benefit of, or providing a benefit to, any party not a signatory hereto.

I. Cooperation with Inspector General

In accordance with Section 20.055(5), F.S., the Agency understands and will comply with its duty to cooperate with the Inspector General in any investigation, audit, inspection, review, or hearing.

J. Force Majeure

Neither party shall be liable for loss or damage suffered as a result of any delay or failure in performance under this Agreement or interruption of performance resulting directly or

indirectly from acts of God, fire, explosions, earthquakes, floods, water, wind, lightning, civil, or military authority, acts of public enemy, war, riots, civil disturbances, insurrections, pandemics, strikes, or labor disputes.

K. Americans with Disabilities Act

The Agency shall comply with the Americans with Disabilities Act. In the event of the Agency's noncompliance with the nondiscrimination clauses, the Americans with Disabilities Act, or with any other such rules, regulations, or orders, this Agreement may be canceled, terminated, or suspended in whole or in part and the Agency may be declared ineligible for further Agreements.

L. Cooperation with the Florida Senate and the Florida House of Representatives

In accordance with Florida law, the Agency agrees to disclose any requested information, relevant to the performance of this Agreement, to members or staff of the Florida Senate or the Florida House of Representatives, as required by the Florida Legislature. The Agency is strictly prohibited from enforcing any nondisclosure clauses conflictive with this requirement.

REMAINDER OF THIS PAGE INTENTIONALLY LEFT BLANK

IN WITNESS THEREOF, the parties hereto have caused this Agreement to be executed by their undersigned officials as duly authorized.

AGENCY:
CRESTVIEW POLICE DEPARTMENT

SIGNED BY: _____

NAME: _____

TITLE: _____

DATE: _____

FEIN: _____

FLORIDA DEPARTMENT OF CORRECTIONS

SIGNED BY: _____

NAME: _____

TITLE: Chief, Bureau of Procurement

DATE: _____

Approved as to form and legality, subject to execution.

SIGNED BY: _____

NAME: Dorothy M. Burnsed

TITLE: Deputy General Counsel

DATE: _____

CITY OF CRESTVIEW

Item # 10.2.

Staff Report

CITY COUNCIL MEETING DATE: May 10, 2021
TYPE OF AGENDA ITEM: Action Item

TO:	Mayor and City Council
CC:	City Manager, City Clerk, Staff and Attorney
FROM:	Tim Bolduc, City Manager
DATE:	5/5/2021
SUBJECT:	Main Street Demolition Bid

BACKGROUND:

Every year, the city is allocated Community Development Block Grant (CDBG) funds. The City of Crestview Nuisance Abatement Program was approved in the CDBG 2020-21 Annual Action Plan by City Council on 7/27/20.

The goal of the nuisance abatement program is to use funding to assist in the reduction of blighted and deteriorating properties through the removal of unsafe conditions and by enhancing the appearance and condition of structures.

The CDBG National Objective that this program meets is *Elimination of Slums and Blight.*

DISCUSSION:

On April 6, 2021, the city received a nuisance abatement application for a property located at 109 Main St. The applicant provided one quote for demolition of the building.

City staff reached out to two additional demolition contractors and was able to obtain one additional quote.

The purchasing policy requires sealed bids when the estimated cost will exceed $15,001. Staff has concerns that obtaining any additional bids will be difficult due to the poor responses on the last two attempts to obtain bids for demolition projects. For this reason, staff is requesting to move forward with the two bids provided.

The bids are as follows;

Phil-dirt Inc. Did not respond.

Jobe's Dirt Works LLC $29,477.00

R&D Development Inc. $28,500.00

In preparation for the CDBG Nuisance Abatement Program, the city issued a request for proposals for a demolition contractor on March 18, 2021. The City Council elected to reject all bids due to lack of participation and the location of the only bidder.

Staff is currently in the process of rebidding the demolition contractor bid, however, the building is located on Main Street, and is a safety hazard which needs to be removed as soon as possible.

Community Development Block Grant Funds will be used for this demolition, which also requires timely expense of the funds.

GOALS & OBJECTIVES

This item is consistent with the goals in A New View Strategic Plan 2020 as follows;
Foundational- these are the areas of focus that make up the necessary foundation of a successful local government.
Financial Sustainability- Achieve long term financial sustainability

Organizational Capacity, Effectiveness & Efficiency- To efficiently & effectively provide the highest quality of public services

Infrastructure- Satisfy current and future infrastructure needs

Communication- To engage, inform and educate public and staff

Quality of Life- these areas focus on the overall experience when provided by the city.
Community Character- Promote desirable growth with a hometown atmosphere

Safety- Ensure the continuous safety of citizens and visitors

Mobility- Provide safe, efficient and accessible means for mobility

Opportunity- Promote an environment that encourages economic and educational opportunity

Play- Expand recreational and entertainment activities within the City

Community Culture- Develop a specific identity for Crestview

FINANCIAL IMPACT

Funding for the CDBG Nuisance Abatement Program was approved as part of the 2020-21 budget.

RECOMMENDED ACTION

Staff is requesting City Council approval to accept the proposals as they were received and award the contract to the low bidder, R&D Development Inc. for $28,500.00.

Attachments

1. Jobe's Dirtworks 109 Main St Demo Proposal
2. R&D Development 109 Main St Demo Proposal

JOBE'S DIRT WORKS LLC

5592 OLD RIVER ROAD
BAKER, FL 32531
Jobe: 850 – 546 – 1514
Office: 850 – 375 - 6771
E-mail: JobesDirtWorks@gmail.com

COMMERCIAL & RESIDENTIAL DEMOLITION
LICENSED & INSURED

Apr. 7, 2021

To: Courthouse Suites LLC c/o Alex Barthe
114 East Cedar Ave
Crestview, FL 32536

E-mail: CourthouseSuitesCrestview@gmail.com

Re: Bid for Main St. N., Crestview, FL
Parcel i.d. # 17-3N-23-2490-0009-052D

Includes:

- Providing work plan to DEP for demolition of structure
- Filing of NESHAP; Pulling of city permit
- Demolition of structure including slab and footers
- Hauling and proper disposal of all debris
- Leveling of disturbed area upon completion

Does not include:

- Fill dirt
- Seed or sod

$ 29,477.00
To be paid at completion.

Jobe Everson, M.M.
Jobe's Dirt Works LLC

Signature

Print name & address

R & D Development INC
213 Sweetwater Run
Niceville, FL 32578
And
BAKER'S LAND CLEARING & CONSTRUCTION SERVICES, LLC
393 Bess Avenue
Crestview, FL 32578
Telephone: 850-685-1850 Email: rodneybolton7@gmail.com

Client: City of Crestview **Re: Demo Building**
Location: 109 Main St, Crestview, FL **Date: April 14, 2021**

R&D Development & Baker Land Clearing & Construction Services in a joint venture proposes the following:

- Permit and provide liability insurance
- Demo the building
- Provide haul off

The price to provide items above is $28500.00

*****Note: The building has been evaluated and at this time there is no sign of asbestos. If at any time asbestos materials are discovered the City will be notified. Asbestos abatement is not included in the price above to demo the building.**

Rodney Bolton, President of R&D Development INC
General Contractor CGC1504847 Roofing Contractor CCC1329480

Toby Baker, Owner of BAKER'S LAND CLEARING & CONSTRUCTION SERVICES, LLC

City of Crestview(Agent of the City of Crestview

CITY OF CRESTVIEW Item # 10.3.

Staff Report

CITY COUNCIL MEETING DATE: May 10, 2021
TYPE OF AGENDA ITEM: Action Item

TO:	Mayor and City Council
CC:	City Manager, City Clerk, Staff and Attorney
FROM:	Wayne Steele, Public Services Director
DATE:	5/7/2021
SUBJECT:	Emergency Purchase of PVC Irrigation pipe for Golf Course

BACKGROUND:

In recent weeks, as part of our normal ordering of PVC pipe used through-out the City, staff was made aware of the shortage of materials and the expected price increase. Public Services was notified by several of our suppliers that currently there is or will be a shortage in the availability of most PVC Pipe and to expect regular price increases.

On April 27th, Public Services Staff shared with the City Manager that installed prices for 8" pvc pipe had doubled from approximately $49.00 per ft. to nearly $100.00 per foot.

The explanation staff has received for the increase is as follows. The PVC pipe supply, already tight from low chlor-alkali (process used to make chlorine) operating rates during 2020, plummeted due to the mid-February ice storm in Texas. The outages damaged plants so restarts were slow and ongoing. As much as 75% of US production capacity was offline during February 2021 and production had not fully restarted by the end of March. Manufactured goods, which use chlorine to produce the product, are feeling the supply squeeze resulting in shortages and increased prices.

Demand during the first quarter remained steady and firm on strong residential construction activity and other downstream demand for finished goods made from PVC. Residential construction spending in February was up by 21% from February 2020, a result of Covid and cultural changes wrought by working from home and low interest rates used to stimulate the economy. Demand for US PVC into global markets was also steady and strong. That steady, strong demand ran counter to the usual winter season slowdown; therefore, creating a greater deficiency.

Supply during second quarter should increase as plants ramp up from the severely constrained supply following the freeze and lockdowns. Plant restarts have been slow because upstream sectors were also affected by the storm. Current forecasts are that production will return to near normal by the end of May and the market will rebalance later this summer after producers catch up on contracted back-orders.

DISCUSSION:

Staff is continuing to work with Mammouth Sports to finalize a contract for the repairs to the golf course. While there are still outstanding items and the contract has not yet been executed, one of the primary components of the contract is to have the City make direct purchases on large material orders to save on sales tax expenditures. This process is referred to as “owner direct purchasing” and is a common practice in large

municipal construction related projects.

The attached materials list, this includes 22,800 feet of CL200 PVC pipe needed for the new irrigation system. On Monday, May 3rd the Public Services Director was made aware of an additional price increase of 8 to 10% by the end of the week.

While discussing this potential increase and with no immediate change to the price increases and material shortages for PVC pipe, The City Manager recommended that we move forward with issuing an Emergency Purchase Order in accordance with Section 3 part C of the purchasing manual. This section of the Manual, allows for the City Manager to approve purchase orders whose timely issuance can protect the City from loss. Failing to move quickly on this particular purchase would likely result in loss in the form of increased prices for materials and further delay on receiving the materials resulting in costly delays in opening the golf course.

"C. Emergency Purchase
An "Emergency" is defined as a situation brought about by a sudden unexpected turn of events or any circumstance or cause beyond the control of the City in the normal conduct of its business. An emergency purchase is made to alleviate a situation where there is a threat to health, welfare, injury, or loss to the City that can only be rectified by immediate purchase of equipment, supplies, materials or services.
An "emergency purchase" must fit the circumstances noted above and requires such competition as is practicable under the circumstances. Poor planning and inadequate management are not "emergencies" and cannot be treated as such. Purchases of this nature may be expedited, but still do not justify "emergency" status. An emergency situation that requires a service call should not exceed $300.00. Related quote information should be entered through the normal requisition process."

Following the decision to secure the needed pipe, staff was made aware that the price had already increased 6% costing the City an additional $4,863.75. On Thursday May 6th, staff received an additional quote from a second vendor which had increased in price of $20,927.40. On Friday May 7th the pipe cost from FIS Outdoor increased an additional $6,000.

Once Staff was able to secure the purchase order with FIS Outdoor, the price for the pipe was secured at $92,236.60. The PO does allow for a 14 day refusal period, but staff is recommending approval of the emergency PO as it stands securing the much needed pipe.

Please see the attached quote sheet and vendor information.

GOALS & OBJECTIVES

This item is consistent with the goals in A New View Strategic Plan 2020 as follows;
Foundational- these are the areas of focus that make up the necessary foundation of a successful local government.
Financial Sustainability- Achieve long term financial sustainability

Organizational Capacity, Effectiveness & Efficiency- To efficiently & effectively provide the highest quality of public services

Infrastructure- Satisfy current and future infrastructure needs

Communication- To engage, inform and educate public and staff

Quality of Life- these areas focus on the overall experience when provided by the city.

Community Character- Promote desirable growth with a hometown atmosphere

Safety- Ensure the continuous safety of citizens and visitors

Mobility- Provide safe, efficient and accessible means for mobility

Opportunity- Promote an environment that encourages economic and educational opportunity

Play- Expand recreational and entertainment activities within the City

Community Culture- Develop a specific identity for Crestview

FINANCIAL IMPACT

The funding necessary for this purchase is available in General Fund Contingencies 001-0311-95-9500. Staff is currently working to secure financing that will be used for the Golf Course repairs.

RECOMMENDED ACTION

Staff respectfully requests the approval of an emergency purchase in the amount of $92,236.60 (in order to secure or lock-in pipe pricing) with FIS Outdoor for a total of 22,800 feet of class 200 PVC Irrigation Pipe for the Foxwood Golf Course improvements.

Attachments

1. Golf Course Pipe Costs
2. SKM_C45821050617210
3. SKM_C45821050710130

30-Mar-21
Foxwood Country Club
Crestview, Florida

Quoted by: FIS Outdoor
300 Central Park Drive. Sanford, FL 32771
PH#407-995-9095
FX#407-995-9793
Bill Seigle 850-375-0652
bill.seigle@fisoutdoor.com

Clay Uselton, Nutt Irrigation
931-247-6928
uselton0309@gmail.com

RAIN BIRD EQUIPMENT

ITEM	Qty		Sell Price Ea		TOTAL
55K1 - B13301 - 55 K-1 KEY	2	$	50.222	$	100.44
5RC - B12703 - 5 RC VLV W/YEL NON LKG COVER	19	$	48.533	$	922.13
A900IC8052 - J0010052IC - ACME EAGLE 900 ICM 52 80PSI (369 + 187 = 556 - 101 = 455)	455	$	161.956	$	73,689.98
A950IC8022 - J0045022IC - ACME EAGLE 950 ICM 22 80PSI (56 + 26 = 82)	82	$	171.889	$	14,094.90
DBRYUL100 - DBRY100 - DB RED YELLOW WIRE CON BOX 100 (1700-200=1500)	1,500	$	0.878	$	1,317.00
DRSVK18 - D02221 - KEY, DR-SVK-18 INCH SELECTOR V	2	$	41.778	$	83.56
EGLSVK - B41720 - KEY, SELECTOR VLV EAGLE 01	2	$	9.956	$	19.91
ICI3000120 - HS6030 - ICI 2250/ 3000 120 VAC	1	$	5,934.378	$	5,934.38
ICSD - HS1000 - IC Surge Device	71	$	36.000	$	2,556.00
ISTSRS - D02237 - INSTALLATION SOCKET FOR TSRS	2	$	9.967	$	19.93
MGP1 - D05400 - MGP-1 GROUNDING PLATE ASSY 07	1	$	113.544	$	113.54
MSP1 - D05110 - MSP-1 (LONG) MAXI SURGE PIPE07	2	$	190.689	$	381.38
SRP - D02203 - PLIERS, SNAP-RING - 900/DR	2	$	67.844	$	135.69
UHA - D05205 - UHA HOSE ADAPTER 01	2	$	71.256	$	142.51
VT900N - B41730 - 900/DR VALVE INSERTION TOOL	2	$	74.989	$	149.98
GVBSTDGR - G11400 - VALVE BOX, STD ASSY W/GRN LID (ICSD at LIV)	71	$	20.233	$	1,436.54
GVBJMBGR - G11430 - VALVE BOX, JMB ASSY W/GRN LID (Central + 2 ARV)	3	$	34.756	$	104.27
GVB10RNDGR - G11450 - VLVE BX, 10" RND ASSY, GRN LID (Mainline Valves)	21	$	10.689	$	224.47
GVB7RNDGR - G11480 - VALVE BOX, 7RND ASSY W/GRN LID (QCV + 6 LIV)	25	$	8.222	$	205.55
CIRRUSCG1 - H95001G1 - CIRRUS FULL CPU & 1 YR GSP	1	$	7,549.700	$	7,549.70
SH2 - B40003 - SH-2 SWIVEL 1 X 1	2	$	36.289	$	72.58
SJ8150T33 - JG010033 - 8X1.50 TOP MOUNT ACME (425 + 213 = 638 - 101 = 537)	537	$	27.833	$	14,946.32
Certified GSP Start Up (Provided by Bill Seigle)	1	$	-	$	-
Central Programming (Provided by Bill Seigle)	1	$	-	$	-
TOTAL RAIN BIRD EQUIPMENT				**$**	**124,200.76**

PVC PIPE

ITEM	Qty		Sell Price Ea		TOTAL
4" CL200 PVC RT Pipe	13000	$	2.397	$	31,161.00
6" CL200 PVC RT Pipe	9800	$	5.092	$	49,901.60
TOTAL PVC PIPE				$	81,062.60

HDPE PIPE (STICKS UNLESS NOTATED)

ITEM	Qty		Sell Price Ea		TOTAL
10" HDPE Pipe 4710 SDR 13.5	40	$	18.278	$	731.12
2" HDPE Pipe 4710 SDR 13.5 COILS	47000	$	0.656	$	30,832.00
3" HDPE Pipe 4710 SDR 13.5 COILS	4600	$	1.433	$	6,591.80
TOTAL HDPE PIPE				$	38,154.92

WIRE

ITEM	Qty		Sell Price Ea		TOTAL
WIRE 14-2 MAXI 2500ft BLUE (14 -1 = 13 rolls x 2,500' = 32,500')	13	$	755.556	$	9,822.23
WIRE 14-2 MAXI 2500ft RED (14 - 1 = 13 rolls x 2,500' = 32,500')	13	$	755.556	$	9,822.23
TOTAL WIRE				$	19,644.46

GATE & BALL VALVES

ITEM	Qty		Sell Price Ea		TOTAL
4 RT Gate Valve, Flomatic	11	$	231.722	$	2,548.94
6" RT Gate Valve, Flomatic	10	$	434.778	$	4,347.78
Wrench Operated Full Bore Ball Valve, Treated Water, 4710/3608 HDPE - 2, DR= 11Body	24	$	60.000	$	1,440.00
Wrench Operated Full Bore Ball Valve, Treated Water, 4710/3608 HDPE - 3, DR= 11Body	42	$	150.000	$	6,300.00
BV2 2" Brass Threaded Ball Valve (ARV Assy)	2	$	23.167	$	46.33
HARCO 65-317503 PJ ADAPTER 3" (3" Isolation Valves)	42	$	34.656	$	1,455.55
HARCO 65-317506 PJ ADAPTER 6" (6" x 6" x 10" Tee at Pump Station)	2	$	84.522	$	169.04
HARCO 65-077506 6" PJ ADAPTER RESTRAINT KIT (Pump station tee)	2	$	91.233	$	182.47
TOTAL GATE & BALL VALVES				$	16,490.11

SWING JOINTS (Rainbird Included in Rainbird Section)

ITEM	Qty		Sell Price Ea		TOTAL
LASCO G1PS-218 1" SWING JOINT SADDLE X SNAP LOK (QCV)	19	$	44.824	$	851.66
TOTAL SWING JOINTS (Rainbird in Rainbird Section Above)				$	851.66

DUCTILE IRON FITTINGS

ITEM	Qty		Sell Price Ea		TOTAL
Ductile Iron 45° Bends - 4"	6	$	72.059	$	432.35
Ductile Iron 45° Bends - 6"	7	$	117.718	$	824.03
Ductile Iron One-Piece Tees - 4 x 4 x 3 (3" Isolation Valves)	23	$	123.212	$	2,833.88
Ductile Iron One-Piece Tees - 4 x 4 x 4	4	$	122.518	$	490.07
Ductile Iron One-Piece Tees - 6 x 6 x 3 (3" Isolation Valves)	19	$	155.353	$	2,951.71
Ductile Iron One-Piece Tees - 6 x 6 x 6	7	$	197.776	$	1,384.43
Ductile Iron Reducers - Small End Bell - 6 x 4	9	$	90.482	$	814.34
Ductile Iron Tapped Tees (Service Tees) - 4 x 2 (2" Isolation Valves)	14	$	84.082	$	1,177.15
Ductile Iron Tapped Tees (Service Tees) - 6 x 2 (2" Isolation Valves)	12	$	110.506	$	1,326.07
TOTAL DUCTILE IRON FITTINGS				$	12,234.03

HDPE FITTINGS

ITEM	Qty		Sell Price Ea		TOTAL
IPS Tee, Butt Fusion Molded; 4710/3608 HDPE; ASTM D3261 - 3, DR= 11Body, 11End	76	$	12.976	$	986.18
IPS Tee, Butt Fusion Molded; 4710/3608 HDPE; ASTM D3261 - 10, DR= 11Body, 11End	1	$	370.541	$	370.54
IPS 90° Bend, Butt Fusion Molded; 4710/3608 HDPE; ASTM D3261 - 3, DR= 11Body, 11End	20	$	12.153	$	243.06
IPS Reducer, Butt Fusion Molded; 4710/3608 HDPE; ASTM D3261 - 3 x 2, DR= 11Body, 11End	120	$	7.588	$	910.56
IPS Reducer, Butt Fusion Molded; 4710/3608 HDPE; ASTM D3261 - 8 x 6, DR= 11Body, 11End	2	$	50.706	$	101.41
IPS Reducer, Butt Fusion Molded; 4710/3608 HDPE; ASTM D3261 - 10 x 8, DR= 11Body, 11End	2	$	84.188	$	168.38
IPS Brass Transition Fitting MNPT x Butt Fusion; 4710/3608 HDPE; Red Brass - 2, DR= 11Body (26 + 2)	28	$	40.282	$	1,127.90
IPS Tee, Socket Fusion, Molded; 4710/3608 HDPE; ASTM D2683 - 2 x 2 x 2, DR= 11Body, 11End	140	$	10.588	$	1,482.32
IPS 90° Bend, Socket Fusion, Molded; 4710/3608 HDPE; ASTM D2683 - 2, DR= 11Body, 11End	54	$	6.176	$	333.50
IPS 90° Bend, Socket Fusion, Molded; 4710/3608 HDPE; ASTM D2683 - 3, DR= 11Body, 11End	42	$	13.918	$	584.56
IPS Coupling, Socket Fusion, Molded; 4710/3608 HDPE; ASTM D2683 - 2, DR= 11Body, 11End	26	$	2.424	$	63.02
IPS Coupling, Socket Fusion, Molded; 4710/3608 HDPE; ASTM D2683 - 3, DR= 11Body, 11End	42	$	10.341	$	434.32
IPS Cap, Socket Fusion, Molded; 4710/3608 HDPE; ASTM D2683 - 2, DR= 11Body, 11End	130	$	7.365	$	957.45
TOTAL HDPE FITTINGS				$	7,763.20

PVC Sch40/80 FITTINGS

ITEM	Qty		Sell Price Ea		TOTAL
Sch80 2 X 4 TBE NIP S80 (ARV Assy)	4	$	1.318	$	5.27
Sch80 2 X 6 TBE NIP MCH (ARV Assy)	2	$	1.706	$	3.41
Sch80 2 X 8 TBE NIP MCH (ARV Assy)	2	$	2.094	$	4.19
Sch80 2 X 10 TBE NIP MCH (ARV Assy)	2	$	2.553	$	5.11
808-020 Sch80 2" ELL-90 Threaded (ARV Assy)	2	$	6.212	$	12.42
LASCO 364-251 2" X 1-1/2" TAPT SADDLE (649 - 101 = 548)	548	$	14.447	$	7,916.96
LASCO 364-337 3" X 1-1/2" TAPT SADDLE	8	$	19.718	$	157.74
TOTAL PVC SCH40/80 FITTINGS				$	8,105.10

ELECTRICAL ACCESSORIES

ITEM	Qty		Sell Price Ea		TOTAL
Cu Plate & 25' of #6 Wir;4"x96"x.060 Copper Grounding Plate at Central Computer	1	$	142.353	$	142.35
Gem Grounding Powerset;25 Lb Bag	4	$	43.529	$	174.12
Ground Rod 5/8 X 8;	72	$	18.824	$	1,355.33
5/8" Ground Rod Clamp;	72	$	1.318	$	94.90
New Style One Shot Conne;3 Hole	1	$	15.341	$	15.34
APC Smart-UPS 1500va LCD;120v	1	$	705.882	$	705.88
RBSC Ground Checks at Representative ICSD Locations (Provided by Bill Seigle)	20	$	-	$	-
2x3 Yellow Marking Tag W/Zip Tie	300	$	0.612	$	183.60
TOTAL ELECTRICAL ACCESSORIES				$	2,671.52

MISCELLANEOUS

ITEM	Qty		Sell Price Ea		TOTAL
5' Handle Valve Wrench for 2" Operator Nut	1	$	29.529	$	29.53
30" Valve Key	1	$	5.882	$	5.88
TEFLON TAPE 3/4"	20	$	0.588	$	11.76
2" Air/vac Relief Valve;Plastic	2	$	99.282	$	198.56
TOTAL MISCELLANEOUS				$	245.73

SUB TOTAL	$	311,424.09
	$	-
GRAND TOTAL	$	-
SALES TAX		TBD

OPTIONS AND ALTERNATES

ITEM	Qty		Sell Price Ea		TOTAL
RAINCAN - F69400 - TIPPING BUCKET RAIN CAN 4"	1	$	291.222	$	291.22
Integrated Control Imput Device	1	$	430.833	$	430.83
A752IC8036 - GRC142836 - ACME RAIN BIRD 752ICM 36 80PSI (Original 213)	1	$	183.967	$	183.97
GSP 2YR SINGLE PMT	2	$	3,757.522	$	7,515.04
SJ12150T33 - JH010033 - 12"L 1.5"D SJ ACME-ACME TOP	638	$	33.600	$	21,436.80
6" HDPE Pipe 4710 SDR 13.5	13000	$	3.500	$	45,500.00
8" HDPE Pipe 4710 SDR 13.5	9800	$	5.933	$	58,143.40
WIRE 10-1 BARE COPPER SHIELDING WIRE	25000	$	0.148	$	3,700.00
Bundle 100 Flags - Blue	4	$	8.471	$	33.88
Bundle 100 Flags - Green	1	$	8.471	$	8.47
Bundle 100 Flags - Purple	1	$	8.471	$	8.47
Bundle 100 Flags - Lime Glow	3	$	8.471	$	25.41
Bundle 100 Flags - Orange Glow	1	$	8.471	$	8.47
Bundle 100 Flags - Pink Glow	1	$	8.471	$	8.47
Bundle 100 Flags - White	1	$	8.471	$	8.47
Bundle 100 Flags - Yellow	1	$	8.471	$	8.47
6" x 2" Side Wall Branch Saddle	14	$	14.388	$	201.43
8" x 2" Side Wall Branch Saddle	12	$	14.388	$	172.66
6" x 3" Side Wall Branch Saddle	23	$	21.741	$	500.04
8" x 3" Side Wall Branch Saddle	19	$	21.741	$	413.08
TOTAL OPTIONS AND ALTERNATES				$	138,598.58

Quote:

Pricing: Valid for 7 days unless stated otherwise.

Full Package Purchase: This price quote is based on a full package purchase only. Failure to purchase all the above product components will result in a change of the unit prices.

Calculation Errors: In case of errors in extensions or totals, unit prices shall prevail. Please double check extensions and totals.

Returns:

Most items contained in this quotation are not normal stocking items and are ordered for this project solely. Special order items are not returnable. Any items returned will be returned to the respective vendor and any credit will be what that respective vendor provides, minus any restock fees and freight that vendor charges. All items must be returned in their original boxes in order to receive credit. All pipe must be in full pallets, wire in full reels, fittings and other material must be in new and resaleable condition. Items that are not new and resaleable cannot be returned for credit. Any returned standard stocking item in quantities beyond our normal stocking level will be charged a 25% restocking fee.

Material Takeoff Waiver

The above takeoff is the **best estimate of materials by FIS Outdoor**. The materials list is a service of FIS Outdoor to our customers. It is intended to be used as a check list for the customer's own takeoff. This takeoff is not intended to be a sole list of materials. Our customers are responsible for their own takeoff and for their bids to their customers. FIS Outdoor is not responsible for the materials or quantities listed above. Unit prices, not the quantities, are guaranteed for 7 days unless otherwise stated.

This material takeoff does not include the following unless otherwise stated: Thrust block material, bridge crossings, road crossings, pump station, and applicable state sales tax.

By accepting this material list you are accepting the waiver and exceptions stated above.

Date:
Requested Delivery Date:
Ship to Address:
Street Address:
County: **State:** **Zip:**
Contact Name:
Contact Number: **Fax:**
Contact Email:
Signature: Accepted for Buyer:

Please sign and return one copy of this quote upon acceptance.

City of Crestview

Quote Comparison Form

Requisition No. FO 2110 Name WAYNE STEELE

Date: 5/6/2021 Dept: Public SERVICES

Item/Service Requested:

13,000 L.FEET OF 4" CL200 PVC PIPE / 9,800 L.FT. OF 6" CL200 PVC pipe

Quote 1

Company FIS Outdoor Contact Bill SEIGLE

Vendor No. _____ Phone No. 850-375-0652

Quote $ 86,236.60

___mail___telephone___fax___email___other

Quote 2

Company Jerry PATE Turf & Irrigation Contact MIKE PAYNE

Vendor No. _____ Phone No. 850-479-4653

Quote $107,164.00

___mail___telephone___fax___email___other

Quote 3

Company CORE & MAIN Contact Keith Hobbs

Vendor No. _____ Phone No. 850-393-9196

Quote CAN'T GET PIPE

___mail ✓telephone___fax ✓email ✓other

I hereby affirm that the above quotes have been sought and conform in every respect with the requirements of the City's Purchasing Manual.

Wayne Steele

Department Head

Jerry Pate Turf & Irrigation

SALES QUOTE

Quote #	33213
Location #	01
Date	05/06/21
Page	Page 1 of 1

207600
CITY OF CRESTVIEW
PO BOX 1209
CRESTVIEW FL 32536

Ship To :
CITY OF CRESTVIEW
Attn Carlos Jones
PUBLIC WORKS
715 N FERDON BLVD
CRESTVIEW FL 32536

Expiration Date : 06/06/21

Cust PO # :	Foxwood CC Pipe
Terms :	NET 60 DAYS
Reps :	074 / 075
Ship Via :	FedEx 13 - Ground FL/GA

Product / Description	Quantity	U/M	Price	Extension
HDR13.5-1000 10" SDR13.5 HDPE 4710 IPS PIPE	40	LF	15.67	626.80
HDR13.5-0800 8" SDR13.5 HDPE 4710 IPS PIPE	9,800	LF	10.00	98,000.00
HDR13.5-0300 3" SDR13.5 HDPE 4710 IPS PIPE	4,600	LF	1.70	7,820.00
HDR13.5-0200 2" SDR13.5 HDPE 4710 IPS PIPE	47,000	LF	0.77	36,190.00
200-0400 4" 200# GASKETED WHITE RT	13,000	LF	3.17	41,210.00
200-0600 6" 200# GASKETED WHITE RT	9,800		6.73	65,954.00

A Message from Jerry Pate

Dear Valued Customer:

As Chairman and Founder of Jerry Pate Company, I pledge to provide you with the best quality products and parts, and exceptional customer service. We are committed to building valued relationships through integrity and professionalism, while enhancing the quality of life and well-being of people and communities. Our Core Values are Faith, Family, and Career Opportunities. We value your loyalty and continued business, and thank you for trusting us as your provider of the finest products and services in the industry.

Jerry Pate

Subtotal :	249,800.80
Tax :	0.00
Total :	249,800.80

Accepted By Date

Return Guidelines

We stand behind what we sell. If for some reason you are not satisfied with your purchase, we will gladly accept your timely return of eligible items. To view our return policy, please visit https://jerrypate.com/parts-service/. All errors in shipment must be claimed within 10 days of receipt of shipment. All returns must have a Return Merchandise Authorization (RMA), and may be subject to a 15% restocking fee. To make a return or inquire about eligible returns, please contact one of our Customer Care Team Members .

1800-700-7004 customercare@jerrypate.com

1-800-700-7001 • 301 Schubert Drive, Pensacola, Florida, 32504 • www.JerryPate.com

TORO ECHO Club Car

Wayne Steele

From: Bill Seigle <Bill.Seigle@fisoutdoor.com>
Sent: Wednesday, May 5, 2021 2:52 PM
To: Wayne Steele
Subject: 6%increase on pipe

Wayne
~~Steve~~,

Can you get give us a good faith PO number.
We can put a 14 day refusal on it for you.
We would like to get PO in with our vendors.
See below. I used 6% markup.

4" CL200 PVC RT Pipe	13000	$	2.550	$	33,150.00	Quoted Only		2.294680851	$	29,830.851
6" CL200 PVC RT Pipe	9800	$	5.417	$	53,086.60	Quoted Only		4.875531915	$	47,780.213
TOTAL PVC PIPE				$	86,236.60				$	77,611.064

HDPE PIPE (STICKS UNLESS NOTATED)

ITEM	Qty		Sell Price Ea		TOTAL	List	Disc Cat	Cost		Ext Cost	10%
10" HDPE Pipe 4710 SDR 13.5	40	$	19.444	$	777.76	Quoted Only		$ 17.500	$	700.000	
2" HDPE Pipe 4710 SDR 13.5 COILS	47000	$	0.698	$	32,806.00	Quoted Only		$ 0.628	$	29,516.000	
3" HDPE Pipe 4710 SDR 13.5 COILS	4600	$	1.524	$	7,010.40	Quoted Only		$ 1.372	$	6,311.200	
TOTAL HDPE PIPE				$	40,594.16				$	36,527.200	

"Good God Almighty, I hope you'll find me praising your name no matter what comes'.
Crowder

Have a Blessed Day,

Bill Seigle
Territory Manager
FIS **Outdoor**
bill.seigle@fisoutdoor.com
www.fisoutdoor.com
850.375.0652

Wayne Steele

From: Bill Seigle <Bill.Seigle@fisoutdoor.com>
Sent: Friday, May 7, 2021 8:45 AM
To: Wayne Steele
Subject: Pipe

Wayne,

We can not hold the price.

Our cost was raised this morning. Our PO was kicked back because of increase.

Your new cost if you except is $92,236
Our PO is in with Sanderson at $90,830

We want to keep this project healthy. For both of us below is what we received this morning.

The PO is in and we have locked in the price tell me how to proceed. I'm gonna try and call you also.

> Alright alright alright.... per Todd, this is our current gasket price sheet. Being said sir, I cannot promise you he will not release a new sheet next for a few days then check back in with me to make sure I haven't received anything new (if I do, I will try my best to shoot it out pronto).
>
> Therefore,
>
> 4" PR200 Gasket (white) = 2.69 per foot(13000) = $34,970.00
>
> 6" PR200 Gasket (white) = 5.70per foot(9800) = $55,860.00
>
> Amazing how much the standard of price can change within a month.....

"Good God Almighty, I hope you'll find me praising your name no matter what comes'.